NEW VW GOLF R FIRST PICS

AUTOCAR

FIRST FOR NEWS AND REVIEWS EVERY WEEK

Est. 1895 | autocar.co.uk | 19 February 2020

ROAD TEST

Rolls' divisive new SUV

NEW M1 AND M2

3 NEW BMW Ms

Why they'll be the most fun cars M has ever made

M1

M2 GRAN COUPE

M2 COUPE

AUTOCAR IMAGE

+ DRIVEN

NEW 2 SERIES GRAN COUPE

haymarket

19 - 26 February 2020

£3.80

718 VERDICT

Back as a five-star Porsche

OFFICIAL

Hyundai's new Fiesta beater

GIANT-KILLERS

Can AMG A45 topple GT-R?

POLESTAR 2 DRIVEN • GOODWOOD ON ICE • NEW SORENTO

RENAULT
Passion for life

TopGear.com
AWARDS 2019
GROUPE RENAULT
RENAULT
MANUFACTURER OF THE YEAR

WIN WIN

All-New CLIO

New ZOE - 100% electric

All-New CAPTUR

Renault have been awarded BBC TopGear.com Manufacturer of the Year 2019, so we're giving you **up to an extra £1,000*** towards your new Renault.

Visit renault.co.uk/voucher

ZOE CO_2 whilst driving: 0g/km, MPG: N/A. The official combined fuel consumption figures in mpg (l/100km) for the All-New CLIO and CAPTUR shown are: 44.1(6.4) – 67.2(4.2). The official CO_2 emissions are 127 – 94g/km.

WLTP figures shown are for comparability purposes; only compare figures with vehicles tested to the same technical procedures. Actual real world driving results may vary depending on factors such as weather conditions, driving styles, vehicle load or any accessories fitted after registration. WLTP is a new test used for fuel consumption and CO_2 figures, however until April 2020 the CO_2 figures are based on the outgoing (NEDC) test cycle which will be used to calculate vehicle tax on first registration. Please visit renault.co.uk configure for WLTP figures for any selected options. *£1000 Cash offer towards New ZOE and £500 towards other new Renault cars. Offer can be used in conjunction with other Renault retail offers. Order and register by 31 March 2020 (register by 30 June 2020 for New ZOE). Excludes Twizy, Trafic and Master Passenger models. Retail customers at participating dealers only. For details see renault.co.uk/voucher. Warranty offer applies to new cars (excluding Trafic & Master Passenger vans) for up to 5 years from first registration with unlimited mileage during the first 24 months, then limited to a total of 100,000 miles or 5 years, whichever comes first. The paintwork warranty runs for 3 years and the anti-corrosion warranty for 12 years. Exclusions and limitations apply. For Warranty terms and conditions visit renault.co.uk/warranty.

5 YEAR WARRANTY
100,000 MILES

AUTOCAR
Issue 6398 | Volume 303 | No 8

'11mpg would do for 40 trips from Chelsea to Mayfair and back'

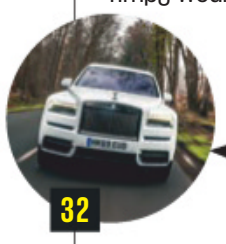

THIS WEEK

NEWS

BMW M2 Coupé, followed by Gran Coupé, M 1 Series 6
Volkswagen Golf R New 329bhp hatch breaks cover 10
Hyundai i20 Supermini to be a design trendsetter 12
Kia Sorento Bold new look for Skoda Kodiaq rival 15
Nissan Leaf 230 miles of real-world self-driving 16
Data sharing How car makers are mining your data 18

TESTED

BMW 2 Series Gran Coupé Sleek four-door rated 24
Porsche 718 Boxster GTS Flat six, manual gearbox 29
Peugeot 2008 Compact crossover with substance 31
Rolls-Royce Cullinan Black Badge ROAD TEST 32

FEATURES

Merc-AMG A45 S vs used Nissan GT-R £50k duel 42
Polestar 2 We drive a prototype of Volvo's Model 3 48
Handles, messiah What makes a great-handling car 50
Bentley Blower Forensic look at £1.5m 'recreation' 54
Who sold what and why Latest global car trends 56
Dancing on ice Austria's very own Festival of Speed 60

OUR CARS

Ford Ranger Raptor version of big pick-up signs off 64
Volvo S60 What we learned on family trip to Jersey 67
Mercedes-Benz 300de Diesel-electric life in winter 69

EVERY WEEK

Jesse Crosse Koenigsegg is poised to 'box clever 17
Damien Smith Formula E, Formula 1 and the future 19
Steve Cropley Ford Ranger Raptor, BTCC, trialling 21
Subscribe Save money and get exclusive benefits 40
Your Views Putting electric cart before the horse 62
Matt Prior We need justice for Harry Dunn 90

DEALS

James Ruppert Hunting for classic BMW or Porsche 70
As good as new Fiat 124 Spider, now from just £11k 72
Spied in the classifieds Five affordable innovators 74
Used buying guide BMW X5. Nomex gloves advised 76
Road test results Autocar's gold mine of data 79
New cars A-Z Key car stats, from Abarth to Zenos 82

KEEN DEALS ON A FIAT 124 SPIDER 72

NEW 400BHP-PLUS BMW M2 COUPE, M2 GRAN COUPE AND M 1 SERIES 6

USED NISSAN GT-R vs NEW MERC-AMG A45 S 42

HOW TO BUILD A 'NEW' OLD BLOWER BENTLEY 54

"FROM ITS DIFFUSER TRAILED A TOW ROPE, AT THE END OF WHICH WAS A SKIER"

YOU WON'T HAVE SEEN A FORMULA E RACE CAR, COMPLETE WITH STUDDED ICE TYRES, DO THIS BEFORE 60

ANDREW FRANKEL DEFINES GOOD HANDLING. DOES TAIL-OUT IN A 911 COUNT? 50

ELECTRIC FOR ALL

MG ZS EV FROM JUST £22,495^

HIGH TECH, FULLY ELECTRIC WITH ZERO EMISSIONS AND AVAILABLE NOW!

COLOUR THE ROAD

MG.CO.UK MGMOTOR

FUEL ECONOMY AND CO_2 RESULTS FOR THE MG ZS EV. MPG (L/100KM): NOT APPLICABLE. CO_2 EMISSIONS: 0 G/KM ELECTRIC RANGE†: 163 TO 231 MILES.

Figures shown are for comparability purposes. Only compare fuel consumption, CO_2 and electric range figures with other cars tested to the same technical procedures. †These figures may not reflect real life driving results, which will depend upon a number of factors including the starting charge of the battery, accessories fitted (post-registration), variations in weather, driving styles and vehicle load. ^MG ZS EV range starts from £28,495 OTR. After Plug-in Car Grant of £3,500 and the MG Customer Saving, customers can purchase their MG ZS EV Excite from just £22,495. The MG Customer Saving and Plug-in Car Grant also applies to Exclusive versions. Offer available until 31st March 2020. OTR prices include VAT where applicable, vehicle first registration fee, delivery, number plates and 12 months' Vehicle Excise Duty. Prices are correct at time of being published and are subject to change without notice.

FOR SAFER CARS EURO NCAP TEST 2019

7 YEAR WARRANTY

AUTOCAR

The original car magazine, published since 1895 'in the interests of the mechanically propelled road carriage'

EDITORIAL
Email autocar@haymarket.com
Editor Mark Tisshaw
Editorial director, Automotive Jim Holder
Editor-in-chief Steve Cropley
Managing editor Sami Shah
Editor-at-large Matt Prior
Deputy editor James Attwood
Deputy editor – digital Rachel Burgess
Deputy digital editor Tom Morgan
Road test editor Matt Saunders
Road testers Simon Davis, Richard Lane
News editor Lawrence Allan
Junior reporters Felix Page, Will Trinkwon
Used cars editor Mark Pearson
Used cars reporter Max Adams
Chief sub-editor Kris Culmer
Group art editor Stephen Hopkins
Art editor Sarah Özgül
Designer Rebecca Stevens
Prepress manager Darren Jones
Senior photographer Luc Lacey
Photographer Olgun Kordal
Junior photographer Max Edleston
Senior videographer Oli Kosbab
Videographer Tej Bhola
SEO manager Jon Cook
SEO executive Oliver Hayman
Picture editor Ben Summerell-Youde

EDITORIAL CONTRIBUTORS
European editor Greg Kable
Used car correspondent James Ruppert
Senior contributing writer Andrew Frankel
Senior contributing editor Richard Bremner
Contributing editor Mike Duff
Senior consulting editor Tom Evans
Features apprentice Harry Roberts
Special correspondents Mauro Calo, Jesse Crosse, James Disdale, John Evans, Colin Goodwin, Hilton Holloway, Julian Rendell, Damien Smith, Richard Webber
Special contributors John Bradshaw, Claire Evans, Kiall Garrett, John Howell, Steve Huntingford, Peter Liddiard, Darren Moss, Allan Muir, Will Nightingale, Doug Revolta, Louis Shaw, Alan Taylor-Jones, Becky Wells, Will Williams, Neil Winn, Dan Wrenn

MEDIA ENQUIRIES
Tel +44 (0)20 8541 3434
Contact Natasha Perry (natasha@performancecomms.com)

SUBSCRIPTIONS
Tel 0344 848 8816 **Overseas** +44 (0)1604 251450
Email help@autocar.themagazineshop.com
Retention marketing manager Amrit Ubhi
Subscription marketing assistant Holly Skingle

SYNDICATION ENQUIRIES
Tel +44 (0)1962 867705
Contact Simon Fox (simon@foxsyndication.com)

LICENSING ENQUIRIES
Tel +44 (0)20 8267 5024
Contact Isla Friend (isla.friend@haymarket.com)

BACK ISSUES
Tel 0344 848 8816
Email help@autocar.themagazineshop.com

ADVERTISING
Classified +44 (0)20 8267 5365 **Display** +44 (0)20 8267 5541
Production +44 (0)20 8267 5814 **Fax** +44 (0)20 8267 5312
Director of agency and OEM Chris Daniels
Sales manager James Hunter

PRODUCTION
Tel +44 (0)20 8267 4147
Group production manager Ailsa Donovan
Senior production controller Charlene Edley

MANAGEMENT
Managing director Rachael Prasher
Marketing director Darren Pitt
Print and events marketing manager Charlene Harry
Publishing and events executive Lydia Banton

© 2020, Haymarket Media Group Ltd. Autocar, Motor, Autocar & Motor are registered trademarks. Circulation enquiries: Frontline Ltd, 1st Floor, Stuart House, St John's Street, Peterborough PE1 5DD (01733 555161). Repro by Haymarket Pre-Press. Printed by William Gibbons, Wolverhampton. Registered as a newspaper with the Royal Mail. Member of the ABC. ISSN 1355-8293.

No part of this magazine may be reproduced, stored in a retrieval system or transmitted in any form except by permission. The publisher makes every effort to ensure contents are correct but cannot accept responsibility for errors or omissions. Unsolicited material is submitted to Autocar entirely at the owner's risk; the publisher accepts no responsibility for loss or damage. With regret, competitions and promotional offers, unless otherwise stated, are not available to readers outside the UK and Eire.

Autocar, ISSN number 1355-8293 (USPS 25185), is published weekly by Haymarket Media Group, Bridge House, 69 London Road, Twickenham TW1 3SP, United Kingdom. The US annual subscription price is $199.78. Airfreight and mailing in the USA by agent named WN Shipping USA, 156-15, 146th Avenue, 2nd Floor, Jamaica, NY 11434, USA. Periodicals postage paid at Jamaica NY 11431. US Postmaster: Send address changes to Autocar, WN Shipping USA, 156-15, 146th Avenue, 2nd Floor, Jamaica, NY 11434, USA. Subscription records are maintained at Haymarket Media Group, Bridge House, 69 London Road, Twickenham TW1 3SP, United Kingdom. Air Business Ltd is acting as our mailing agent.

Autocar is published by Haymarket Automotive, Bridge House, 69 London Road, Twickenham, Middlesex, TW1 3SP, UK
haymarketgroup.com
Tel +44 (0)20 8267 5000

Autocar magazine is also published in China, Greece, India, Indonesia, Japan, Korea, Malaysia, Philippines and Thailand.

Autocar is a member of the Independent Press Standards Organisation (IPSO). We abide by the Editors' Code of Practice and are committed to upholding the highest standards of journalism. If you think we haven't met those standards and want to make a complaint, contact autocar@haymarket.com. For more information, contact IPSO on 0300 123 2220 or visit www.ipso.co.uk

ipso. Regulated

TROUBLE FINDING AUTOCAR?
If you struggle to find a copy of Autocar in your local retailer or area, please send an email to connor.chappell@flgroup.co.uk who will investigate the problem for you.

Autocar is a member of the organising committee of Car Of The Year caroftheyear.org

Haymarket is certified by BSI to environmental standard ISO14001 and energy management standard ISO50001

PEFC
PEFC/16-33-197
PEFC Certified
This product is from sustainably managed forests and controlled sources
www.pefc.co.uk

recycle

COMMENT

DON'T UNDERPLAY THE IMPORTANCE OF CARS LIKE THE CULLINAN

LAST YEAR, THE UK's small, specialist manufacturers – including the likes of Rolls-Royce, Aston Martin, Bentley, McLaren, Morgan and Lotus – saw their collective production grow by 16.2% to 30,756 cars built.

With the wider doom and gloom around the UK car industry, those figures are a timely reminder that so many of our car makers are truly world class and hugely desirable to buyers globally.

One such success story is the Rolls-Royce Cullinan, our road test subject this week (p32). Although many choose not to look past its design, the Cullinan proves to be an excellent car to drive and a hugely appealing ownership proposition for those who can afford it. It also helped Rolls in 2019 to achieve its best annual sales in its 116-year history.

It's often easy to consider cars like the Cullinan and many other British performance and luxury machines an irrelevance, due to their price being beyond the means of so many. Yet the opposite is true: these car makers set the highest standards in performance, luxury and refinement and add huge value to our industry and the wider economy. And there are more car makers like this right here than anywhere else in the world. Cars like the Cullinan should be celebrated.

Mark Tisshaw Editor
mark.tisshaw@haymarket.com @mtisshaw

NEVER MISS AN ISSUE
Subscribe p40

EDITOR'S PICKS

DAVID vs DAVID
The GT-R is a Goliath slayer. Now AMG's A45 is gunning for it, p42

GOODWOOD ON ICE
We head to Austria for the world's most curious motorsport event, p60

WHO SOLD WHAT WHERE
Global car sales for 2019 are in. Who won? Who lost? We reveal all, p56

NEWS

GOT A STORY?
Email our news editor
lawrence.allan@haymarket.com

New M2 to spearhead fiercer junior M line-up

Rear-drive 420bhp BMW M2 to pave the way for M2 Gran Coupé and fiery M1 Series

New M2 (far left) will be joined by a 4WD M2 Gran Coupé

> The M2 is scheduled to go on sale in the UK in 2022 with a detuned version of the new M4's engine

THERE'S STILL A PLACE FOR OLD SCHOOL AT BMW

MATT PRIOR

Ah, the strange world of the car enthusiast. BMW will make us an efficient small coupé or saloon or even a front-wheel-drive hatchback. It'll also offer us a weird combination of the above for, say, coupé fans who need more than two doors.

Or, if we'd prefer, it has a funky front-engined, rear-drive fabric-roofed roadster kind of thing. Y'know: a sports car. What more do we want?

Well, not that. 'Please give us something that looks like a boxy old two-door saloon, guys, and stick a massive engine in it. At least, as massive an engine as one can get away with these days. That'll do nicely.'

I don't know what it is about the peculiar old-school appeal of an M2, but I feel it, too. What I like about the current M2 Competition is that it's as much muscle car as sports car. And it's such an engaging process: I'm glad that BMW sees the need for a manual gearbox and that there are people in the company willing to spend their time on niche products for people like us.

So now, really, all they have to do is stick a solid roof on a Z4. Uglier the better, please.

BMW has given the production green light to a new rear-wheel-drive M2 performance coupé, as part of a future compact M car line-up that will include a four-wheel-drive M2 Gran Coupé and a 1 Series with more than 400bhp.

The second-generation M2 coupé, which takes the internal codename G87, is scheduled to go on sale in the UK in 2022. It will bring with it a detuned version of BMW M's latest six-cylinder petrol engine, sourced from the soon-to-be-revealed new M3 and M4 and the recently introduced X3 M and X4 M.

This twin-turbocharged 3.0-litre petrol unit, dubbed S58, replaces the similarly configured S55 used by the current M2 and promises the same high-revving characteristics, with a redline of 7200rpm.

Nothing is official at this early stage, but insiders hint that the S58 will be tuned to provide the new junior M car with at least 420bhp in standard form – a 16bhp increase over today's M2 Competition – to top the 416bhp of the turbocharged 2.0-litre four-cylinder engine in the Mercedes-AMG A45 S.

Together with 406lb ft of torque, this should ensure off-the-line performance is on par with, if not better than, that of its predecessor, despite an incremental increase in weight due to slightly larger dimensions. Its 0-62mph time should be in the low four-second bracket and its top speed close to 175mph when configured with a final drive ratio similar to today's M2.

Traditional feel of today's M2 is tipped to be carried over

The basis for the new M2 is the forthcoming second-generation 2 Series Coupé, itself heavily related to the third-generation Z4 and its Toyota GR Supra sibling.

Due to reach showrooms in 2021, the new 2 Series Coupé, known internally by the codename G42, takes a different technical route to the new 2 Series Gran Coupé →

New 1 Series M flagship could have as much as 400bhp

AUTOCAR IMAGE

(driven on p24) by adopting the latest evolution of BMW's Cluster Architecture (CLAR) platform. This ensures the future M2 will have a similar mechanical layout to today's model, with a longitudinal engine mounting instead of the transverse layout of its four-door M235i xDrive Gran Coupé sibling, which is based on BMW's Front Architecture (FAAR) platform.

The adoption of the CLAR platform also future-proofs the M2 by providing it with the basis for a 48V electrical architecture, which is crucial for such features as throttle-off engine idling, regenerative braking and the option of an electric boosting function.

The new M2 is expected to go without mild-hybrid electric boosting at launch. However, with BMW's M division already well advanced on such a system for the S58 engine, it could be incorporated during the car's planned seven-year life cycle.

Autocar sources suggest all future M models will eventually receive mild-hybrid technology as part of BMW's plans to lower its fleet average CO_2 figure.

As with today's model, BMW plans to offer the new M2 with a six-speed manual gearbox and an electronically controlled Active M Differential. There will also be the option of an eight-speed torque-converter automatic gearbox, which would be crucial if the car is to receive a mild-hybrid system. This will replace the current M2's dual-clutch automatic, matching developments elsewhere in the BMW M range.

"We have some markets that are calling for an automatic option, but the overwhelming majority of our customers continue to see the manual gearbox as a must-have feature," a BMW M source told Autocar.

As with the current M2, a number of traditional M division developments will elevate the new model above regular 2 Series Coupé variants. These include additional stiffening measures by way of suspension-strut tower-mounted beams front and rear, dynamic engine mounts and a wider track, the last of which again has necessitated new bodywork.

> "A four-wheel-drive M2 Gran Coupé will get around 400bhp"

Despite the M division's move to provide other recent M models with fully variable four-wheel drive, Autocar sources said the new M2 will retain rear-wheel drive exclusively as part of plans to pitch it as a puristic, circuit-bred model in the best of BMW tradition.

"It's part of what makes the M2 unique in its market segment," said an insider. "It's also what our customers have come to expect from BMW M: a pure and undiluted driving experience."

The decision to stick with rear-wheel drive will give the M2 a unique selling point in a market now dominated by four-wheel-drive rivals, including performance hatchbacks such as the Audi RS3 and Mercedes-AMG A45 S. And although the Porsche 718 Cayman is considered a competitor to the new BMW, its engine is mounted in the middle, rather than up front.

Aesthetically, the new M2 is said to draw heavily on the M235i xDrive Gran Coupé for inspiration. The two are said to share similar front-end styling, most notably in the shape of the grille and headlights. However, the longitudinal engine in the new M2 dictates a longer bonnet and a more cab-rearward profile than its transverse-engined four-door relation.

As with the original M2, the new model is scheduled to be assembled alongside standard versions of the second-generation 2 Series Coupé and the third-generation Z4 at BMW's factory in Leipzig, Germany, for the British market. Plans also exist for the model to be built alongside the latest 3 Series at BMW's new San Luis Potosí site in Mexico for other selected markets, including North America.

Autocar also understands the M2 will eventually be joined by a four-door namesake, despite previous reports to the contrary. Rivalling the Mercedes-AMG CLA 45 and forthcoming new Audi RS3 Saloon, the M2 Gran Coupé will get around 400bhp from a highly tuned version of the M235i Gran Coupé's four-cylinder engine and have fully variable four-wheel drive.

That unit will also transfer into the most powerful 1 Series hatchback yet, which will sit above the 302bhp M135i. It's not clear what name this new flagship will take. M1 is considered holy ground, having been used on the first bespoke road-going M car back in 1978, and 1M was the widely used nickname for the limited-run 1 Series M Coupé of 2011.

The new M versions of the 1 Series and 2 Series will complement a successor to the rear-wheel-drive M240i Coupé, giving BMW a diversified line-up of both four- and six-cylinder junior performance cars for years to come.

GREG KABLE

M2 and regular 2 Series will be closely linked to Z4 underneath

WHAT CAR?
makes buying a new car online easy

Just follow these three steps:

pick.
Pick your perfect car, helped by clear, simple buying advice and independent reviews from our in-house experts.

shop.
Shop our network of approved dealers anonymously, and enjoy guaranteed Target Price savings.

drive.
Drive away happy, knowing you've paid the right price for the right car without any awkward haggling.

WHAT CAR? | new car buying made easy

whatcar.com

All-new Golf R out in the open

Styling of the most powerful Mk8 Volkswagen Golf is revealed during winter testing

The new high-performance Volkswagen Golf R has been spotted testing without camouflage, a fortnight before the unveiling of the latest Golf GTI.

Spy photographers saw a prototype undergoing winter testing near the Arctic Circle. Their images reveal that the new hot hatchback is sticking with the formula of its predecessor, with understated performance the order of the day.

Telltale R design cues include a quartet of tailpipes, an enlarged lower air intake and R-specific alloy wheels covering performance brakes with blue-painted calipers.

Although not yet confirmed, power outputs for all of the hot Mk8 Golf variants (the GTI, GTI TCR, GTD, GTE and R) leaked out last month via a slide from an internal presentation.

The slide revealed that the R will put out 329bhp – a 33bhp increase over today's car – from a heavily boosted version of the 'EA888' turbocharged 2.0-litre petrol engine. As before, this will be put through a Haldex-based four-wheel drive system and a seven-speed dual-clutch automatic gearbox. A manual isn't expected to be offered.

Quad tailpipes are a telltale sign of R

The new Haldex system is reported to be capable of fully variable control, constantly altering the drive sent to the front and rear axles, in combination with Volkswagen's XDS+ electronic differential locks and an electronic stability control system that's claimed to incorporate a drift mode like that of the Mercedes-AMG A45.

Volkswagen's R performance arm recruited German touring car racer Benny Leuchter and US rallycross champion Tanner Foust to assist with development driving for the Golf R. R boss Jost Capito said: "We do it to make the car good, but also because it's a lot of fun to work with racing drivers." Leuchter also worked on the development of the recently launched T-Roc R crossover.

Although not yet official, Autocar understands the plan is to unveil the new Golf R at July's Goodwood Festival of Speed. What's not yet clear is if a long-rumoured flagship Golf R Plus, anticipated to produce up to 400bhp, will be saved for a debut next year or even later.

LAWRENCE ALLAN

The Golf
Now loaded with extras

The Golf just got even better. With LED headlights, heated front seats and 2Zone Climatronic air conditioning as standard. And during our Golf Event we'll give you an additional £500 customer saving and 0% APR, available when purchased with Solutions PCP.* **14th – 29th February.**

*At the end of the agreement there are three options: i) pay the optional final payment and own the vehicle; ii) return the vehicle: subject to excess mileage and fair wear and tear, charges may apply; or iii) replace: part exchange 2020. Excludes Golf 8, Golf Estate and Golf SV models. Stock vehicles only, whilst stocks last. Retail orders only. Orders placed by 29th February 2020 and delivered by 31st March 2020. £500 customer saving available comparability purposes; only compare fuel consumption and CO_2 figures with other vehicles tested to the same technical procedures. These figures may not reflect real life driving results, which will depend upon a number of are based on a calculation designed to be equivalent to the outgoing (NEDC) test cycle and will be used to calculate vehicle tax on first registration. The range of figures stated covers the entire Volkswagen Golf model range www.volkswagen.co.uk/owners/wltp or consult your retailer. Data correct at 12/19. Figures quoted are for a range of configurations and are subject to change due to ongoing approvals/changes. Please consult your

SPY SHOTS
VOLKSWAGEN GOLF R

R will top an initial range of five high-performance Golfs

The 21C follows Kevin Czinger's 2015 Divergent Blade

CZINGER HYPERCAR CONFIRMED AS 1233BHP HYBRID

New US company Czinger (News, 12 February) has confirmed its "rule-breaking, record-hunting" 21C hypercar will receive 1233bhp from a hybrid powertrain of undisclosed size, allowing it to blast from 0-62mph in a claimed 1.9sec. The powertrain was developed in-house, as was the 21C's 3D-printed structure, which centres on a two-person in-line seating configuration. The car will make its public debut at the Geneva motor show on 3 March.

the vehicle. With Solutions Personal Contract Plan. 18s+. Subject to availability and status. T&Cs apply. Indemnities may be required. Freepost Volkswagen Financial Services. Offer available between 14th – 29th February in conjunction with any other offer. Finance offer not available in conjunction with any other finance offer. Offer may be varied or withdrawn at any time. Accurate at time of publication (02/2020). Figures shown are for factors including the accessories fitted (post-registration), variations in weather, driving styles and vehicle load. There is a new test used for fuel consumption and CO_2 figures (known as WLTP). The CO_2 figures shown however, including all-electric, hybrid and petrol/diesel vehicles. All-electric vehicles are zero emissions while driving. Hybrid vehicle figures were obtained using a combination of battery power and fuel. For more information, please see retailer for further information.

Official fuel consumption figures for the Golf model range in mpg (litres/100km): combined 0 (0.0) – 141.2 (2); combined CO_2 emissions 0 – 164g/km.

New i20 interior will be revealed at the Geneva show next month

i20 starts next era for Hyundai

Supermini arrives with new styling theme, a wealth of tech and mild-hybrid engines

The all-new i20, revealed ahead of its public debut at next month's Geneva motor show, represents the start of a "revolutionary and ambitious" new design language for Hyundai.

The third-generation Vauxhall Corsa rival is set to go on sale in May and introduces what Hyundai describes as a theme of "sensuous sportiness" that will be applied across the rest of its line-up in due course.

The latest i10 city car features a watered-down version of the i20's angular look, while the facelifted i30 (see below) and new Tucson SUV for 2021 will adopt a similar design approach.

Further to the adoption of distinctive creases and other styling details new to Hyundai, the latest i20 is proportionally different from its predecessor, being 30mm wider, 5mm longer and 24mm lower. Its wheelbase has been lengthened by 10mm to increase passenger space, too, while the boot is now slightly bigger, at 351 litres.

Ten paint colours across a broad spectrum are available, as is the option of a two-tone scheme by way of a black roof.

Although the interior of the new car has yet to be shown, Hyundai has published a detailed sketch that reveals a significant redesign. It has a sculptured look that continues from the front doors across the dashboard, itself dominated by an infotainment touchscreen (10.25in or 8.0in on lower trim levels) mounted at eyeline height.

This sits next to a 10.25in digital instrument display and above an air vent panel whose horizontal 'blades' extend across the fascia. Ambient LED lighting is also present.

Best-in-class connectivity is claimed for the supermini, with wireless Apple CarPlay and Android Auto introduced to the sector for the first time and Hyundai's Blue Link system offering a variety of services including a no-cost five-year subscription for TomTom-supplied live traffic data. Wireless phone charging also features, while the i20 is the first European Hyundai to offer a seven-speaker Bose premium sound system.

Highlights among the huge provision of new safety kit include sat-nav-based adaptive cruise control, which can anticipate corners or straight stretches and lower or raise your speed appropriately, an intelligent speed limiter and lane-following assistance, a system that keeps the car centred within its lane.

Other new features include parking collision avoidance, forward collision warning with pedestrian and cyclist detection, blindspot collision avoidance, rear cross-traffic alert and even a system that warns you if the car in front has moved off and you haven't.

Despite adding all this new tech, Hyundai claims a 4% weight reduction over today's i20. In theory, that should lead to improved performance and efficiency for the petrol-only engine range.

This is topped by a 118bhp 1.0-litre turbocharged triple with a 48V mild-hybrid system – itself responsible for a 3-4% efficiency boost, according to Hyundai. Although efficiency figures aren't yet official, we know it can do 0-62mph in 10.2sec with the six-speed

FIRST SIGHT OF NEW-LOOK i30

Hyundai will reveal an updated i30 at Geneva alongside the new i20. The family hatchback will get an exterior redesign, a digital instrument display and a 10.25in touchscreen. It will be revealed a few days before the show.

BRITISH ELECTRIC SPORTS CAR COMING

Hampshire-based sports car maker Apex, which last year revealed the 600kg AP-1, will show a 'hyper EV' at Geneva. Weighing 1200kg, the AP-0 uses a carbonfibre-only tub. Apex claims "rapid acceleration" and "exceptional cornering ability".

'Sensuous sportiness' is how Hyundai describes it

manual gearbox or one-tenth slower with the seven-speed dual-clutch automatic.

A 99bhp version of the same unit is offered with the same gearboxes. It's likely the UK will get only the mild-hybrid version of this, too.

The entry-level motor is a naturally aspirated 1.2-litre four-cylinder that puts 84bhp through a five-speed manual gearbox to complete the 0-62mph sprint in 13.1sec.

Hyundai hasn't revealed UK pricing, but expect an entry point of just over £15,000 and to pay more than £20,000 for the highest-spec variants.

LAWRENCE ALLAN

2019 Imagine concept combined saloon and SUV design elements

Electric Kia saloon due in 2021

THE NEXT ELECTRIC Kia, due to arrive in 2021, will sit above the existing e-Niro and Soul EV and be based on the Imagine concept that was revealed at last year's Geneva motor show.

The zero-emissions model will take a new name and design, rather than be a variant of an existing model. Kia's policy is to have stand-alone model lines for its electrified vehicles.

The Korean manufacturer recently announced a plan to launch 11 electric vehicles by 2025. This is part of its £19 billion strategy to transform into a maker of electrified vehicles and mobility solutions within the next five years.

Kia currently sells two electric models, the e-Niro and Soul EV, both compact crossovers. Adding a larger one will help the brand reach its goal of taking a 6.6% share of the global EV market by 2025.

Kia UK boss Paul Philpott said: "The Soul EV and e-Niro sit in the same sort of part of the market, so you either go much smaller or bigger [for another EV]. Assuming [EV] supply becomes less limited in 2021, I think [a model that's] a bit bigger would fill a gap."

The third model will sit on a new platform, shared with sibling brand Hyundai, that's set to serve as the basis for a range of larger and more powerful electric saloons and SUVs in the future.

It promises 310 miles of range – 28 miles more than the e-Niro – while an 800V charging system will enable a full charge in just 20 minutes. Ultimately, Kia is working towards a range of 500 miles for its EVs, but this target won't be reached for some time yet.

The new EV for 2021 will have a "crossover design which blurs the boundaries between passenger and sports utility vehicles", echoing the four-door Imagine concept.

Around 10% of all Kias sold in the UK this year will be electric and 20% hybrid or plug-in hybrid in order for the company to ensure it hits its EU-mandated emissions targets, according to Philpott.

HYUNDAI 45 CONCEPT IS CLOSER TO REALITY

What appears to be the production version of the Hyundai 45 concept has been spied testing. Despite the heavy camouflage, we can see the 2019 concept's angular design – inspired by Hyundai's first-ever car – has been tempered slightly, but the proportions suggest this will still be an electric C-segment crossover to rival the Mazda MX-30. Expect it to be unveiled next year.

BEIJING MOTOR SHOW POSTPONED

Autocar understands that the biennial Beijing motor show – usually China's biggest – will be postponed in the wake of the coronavirus outbreak. This has already curtailed the Mobile World Congress in Spain and the Shanghai F1 race.

MULLINER CHRISTENS ITS OPEN-TOP GT

Bentley's in-house coachbuilder, Mulliner, will reveal an exclusive model at Geneva. Called the Bacalar, it is thought to be the £1.5 million open-top grand tourer, of which only 10 examples will be built, that Autocar first detailed last year.

Do you have an innovative idea that could revolutionise the car industry?

Autocar's Drivers of Change initiative seeks to promote talent interested in entering three exciting areas of the automotive industry: technology, digital and retail. In partnership with executive search specialists Ennis & Co, the goal is to energise the industry through innovative thinking. A winner for each category will receive £5000 and the opportunity to attend the Society of Motor Manufacturers and Traders' annual dinner, the biggest automotive industry event of the year.

For more details and to enter, visit www.autocar.co.uk/driversofchange. Terms and conditions apply.

ADVANCED PROPULSION CENTRE UK · Allianz Assistance · BENTLEY · CitNOW · MIRA · Jardine Motors Group · JATO

LOTUS · McLaren · Polestar · SMMT DRIVING THE MOTOR INDUSTRY · TOYOTA · TrustFord · VOLKSWAGEN GROUP UNITED KINGDOM LTD · VOLVO

Kia seems to be chasing Mercedes with its interior design

New Sorento takes cues from larger Telluride

OFFICIAL PICTURES

Kia Sorento moves upmarket

SUV gets bold look, posh interior, raft of new tech and hybrid options

Kia has revealed its new Sorento ahead of the large SUV's debut at the Geneva show next month.

The fourth-generation Skoda Kodiaq rival adopts a design distinctly different to that of its predecessor or any other Kia sold in Europe. This angular styling, which apes the larger Telluride, is likely to be a reflection of its greater sales status in the US than Europe.

The Sorento's proportions have been altered with the aim of making it look longer, by way of shorter front and rear overhangs and a 35mm-longer wheelbase. All other dimensions are only around 10mm greater, although space inside – especially for middle-row passengers – is said to be significantly enhanced, thanks to improved packaging. All UK models will be seven-seaters.

The only image of the interior released so far is of a Korean-spec car, but it's unlikely to be changed much for Europe beyond the choice of trim colours.

Highlights include a Mercedes-style panel that links a larger infotainment touchscreen to a new digital instrument display, while a separate climate control panel is flanked by central air vents.

Technical firsts for Kia include improved cruise control that automatically readjusts limits according to corner gradients, a self-parking function accessed via the key fob, automatic braking if the car is about to hit something while parking and a blindspot monitoring system that uses cameras mounted on the door mirrors to project images of what's alongside the car onto the dashboard.

The Sorento will be launched this autumn with a 199bhp 2.2-litre diesel engine and a 227bhp hybrid powertrain comprising a 1.6-litre petrol engine, a 59bhp electric motor and a 1.5kWh battery. A plug-in hybrid will follow shortly after with 261bhp overall, an 89bhp motor and a 16.6kWh battery.

Buyers will have the choice of front- or four-wheel drive except with the plug-in hybrid, which will exclusively be a 4x4.

JIM HOLDER

HYUNDAI MAKES A PROPHECY

Hyundai will reveal an electric concept car called the Prophecy at Geneva. A blueprint for future design, it's not clear if it previews a production car, as the 45 concept (p13) from 2019's show did.

AMG's new GLE 63 S Coupé packs 603bhp

MERCEDES HAS REVEALED the Coupé version of AMG's new GLE 63, which utilises a mild-hybrid powertrain.

Aside from the sharply styled roofline, the sports SUV is virtually identical to the GLE 63 that came out last November, pairing AMG's 4.0-litre twin-turbocharged petrol V8 with a 48V starter-alternator. The mild-hybrid tech supplies an extra 22bhp and 184lb ft when required.

The GLE 63 Coupé will be offered in 563bhp regular and 603bhp S forms. However, as with the standard GLE, only the S will be offered in the UK.

British buyers will therefore be able to experience a 0-62mph time of 3.8sec and a top speed of 174mph – both identical to the SUV version.

The Coupé also gets the same nine-speed automatic gearbox, 4Matic+ four-wheel drive, active air suspension, active roll stabilisation and six driving modes. A seventh, Race, is exclusive to the S. Official WLTP fuel economy is 24.5mpg, with corresponding CO_2 emissions from 262g/km.

AMG has given the GLE 63 Coupé a redesign in line with its square-rigged sibling, including a bespoke grille and a restyled front end with a large splitter. The S sits on 22in alloy wheels as standard.

Pricing has yet to be disclosed but – as with the smaller GLC and GLC Coupé SUVs – expect Mercedes to charge a small premium over the standard GLE. UK order books will open in the spring.

AMG 63 gets angrier front and rear, arch flares and side skirts

CONFIDENTIAL

TOYOTA'S LONG-TERM hybrid strategy is paying off, as the firm believes it can avoid EU fines by meeting the mandated 95g/km CO_2 fleet average from next year without radical change to its business model. European boss Johan van Zyl also claims even stricter 2025 targets will be met, thanks to 40 forthcoming new or updated electrified models; 90% of Toyotas will be hybrid or electric by then.

MERCEDES DESIGN BOSS Gorden Wagener rates the AMG GT as his favourite design, likening it to the classic Jaguar E-Type. "I can't pick favourites," he said, "but if I had to do one last design, it would be a sports car like that. I love the long bonnet and the cockpit that makes you look and feel so good. Those types of projects are very special."

VOLVO'S SCHEME TO offer a year of free electricity to buyers of its plug-in hybrids could make money for many of them. Volvo will pay cash to buyers for every charge over the first year, calculated on a baseline average for a kWh of electricity in the UK, regardless of where and how the user has charged – even if they've done so at work and therefore not had to pay for the charge themselves.

FORD OF EUROPE will add 1000 charging stations to its sites in the next three years. The plan was announced as boss Stuart Rowley called on local authorities to support the push for electrification. "Infrastructure is critical to helping consumers have the confidence to go electric," he said, "but we can't do it on our own. Accelerated investment by all the key stakeholders across the UK and Europe is more important than ever."

Britain's self-driving trailblazer

We sample the tech-laden Nissan Leaf that broke an autonomous vehicle record

The organisers of a record-breaking drive by an autonomous car on UK roads have hailed the event as a major step forward for the technology.

A modified self-driving Nissan Leaf travelled 230 miles from the Japanese car maker's technical centre in Cranfield, Bedfordshire, to its factory in Sunderland on an trial dubbed the Grand Drive. That route, the longest single journey achieved by an autonomous car in the UK, included B-roads, motorways and challenges such as unlined roads, complex roundabouts, multiple traffic lights and, on motorways alone, overtaking manoeuvres.

The record-breaking run was one of two trials undertaken as part of a £13.5 million development programme called HumanDrive and carried out over 30 months with the aim of creating a more human-like autonomous vehicle (AV) experience. The second trial, a test track-based activity, used machine learning to explore how blending human-like driving behaviour and autonomous technologies can enhance users' experience of self-driving vehicles.

This work was carried out at the Multi User Environment for Autonomous Vehicle Innovation (MUEAVI) facility at Cranfield University. Leafs were equipped with artificial intelligence systems developed by Hitachi and containing data on previously encountered traffic scenarios and solutions. These formed a 'learned experience', enabling vehicles to deal with similar scenarios on the test track – for example, plotting a safe route around an obstacle that felt natural rather than robotic.

The trials were led by Nissan engineers and funded by the government through the Centre for Connected and Autonomous Vehicles (CCAV) and Innovate UK, plus nine other consortium partners. Nissan Japan has pledged to provide funding until 2023.

Autocar experienced a 13-mile section of the Grand Drive route – running from Cranfield to a service station on the M1 and back – in an autonomous Leaf similar to the one that completed the record-breaking run. For the first three miles, the car followed a B-road that, during development, had been recreated in the virtual world by a team of engineers at Catapult, the organisation managing the programme.

Evans (left) tried the Leaf on track, B-road and motorway

Details such as broken lane markings, cambers and road signs were all replicated in the model. An autonomous Leaf then drove through the real environment, with its trajectory and behaviour overlaid onto this digital visualisation. Data from human drivers following the same route enabled engineers to compare the cars' trajectories, with the aim of fine-tuning the Leaf's autonomous responses to provide a more human-like experience.

During our ride, the Leaf behaved naturally, driving around a parked car smoothly, slowing for corners, holding its direction through changing cambers that might have thrown it off-line, and accelerating and slowing progressively through changing speed limits.

At the end of the road, we approached a complex roundabout above the M1 with multiple traffic lights. With the first set of lights showing red, the Leaf pulled up smoothly before, once they'd changed, pulling away to the next set, also on red. Soon, we were clear to drive down the exit ramp to the motorway and the Leaf gained speed progressively before joining the traffic. Once on the motorway, the car held position but, unlike on the Grand Drive, avoided overtaking.

David Moss, Nissan's senior vice-president of R&D, said developing a system that feels natural will be key to winning customer support for autonomous technology. He said the focus on improving the accuracy of the sensors means that "our system is much less reliant on road markings. We combined this technology with the way our own drivers performed to give the system more human-like behaviour.

"We won't be able to map every road in anything like the same detail that we mapped the test route's first three miles, which is why the machine-learning work at MUEAVI that enables a computer to recall and learn from scenarios will be vital to the system's development."

AUTONOMOUS LEAF'S TECH HIGHLIGHTS

The Grand Drive Nissan Leaf bristles with stereo cameras, laser scanners, a radar and a military-grade GPS system. All feed data to multiple autonomous driving and vehicle control ECUs. The boot is filled with a rack of computer equipment that, Nissan claims, will eventually be miniaturised.

The Hitachi-equipped cars used for the MUEAVI trials have forward-facing stereo cameras working with rear- and side-mounted lidar sensors to provide the richest possible picture.

Behind the scenes, Leeds University used its Virtuocity driving simulator to capture driving style and behaviour data for modelling and refining the autonomous driving controllers to behave in more human-like ways.

Project aims to tune the tech so it drives more like a human does

Professor James Brighton, a senior lecturer at Cranfield University's Advanced Vehicle Engineering Centre, added: "We wanted to make overtaking as comfortable as possible, so we improved forward planning to make the process smooth and secure-feeling."

Brighton said that although some autonomous cars overtake in the most efficient manner, it doesn't feel natural, so "the autonomous Leaf positions itself earlier, follows a more natural overtaking line and leaves a comfortable space between it and the other vehicle".

Autocar experienced this on the 0.62-mile-long MUEAVI test track, with a car parked at the side of the road. The Leaf began its manoeuvre in ample time and cleared the car with plenty of space to spare. Engineers are still working out how it will make the same manoeuvre in the presence of an oncoming car.

Brighton explained that human perception has played a major part in refining Nissan's and Hitachi's AV systems. For example, a narrow width restriction makes drivers slow down automatically, whereas an AV won't, potentially upsetting passengers. A high-sided vehicle that's passing will make a human driver instinctively move aside but an AV will continue on regardless.

Brighton said those differences in behaviour mean that, to create an AV that drives like a human, "we had to investigate and consider drivers' attitudes to a car's longitudinal velocity and lateral position on the road".

Moss said the Grand Drive trial was a great success and rejected claims voiced elsewhere in the AV industry that driving around on public roads teaching autonomous systems how to react to situations is dangerous, inefficient and ineffective.

"Safety is our primary concern," he said. "Over 93% of accidents are caused by human error. The technology we're developing will make future cars safer while elements of it will soon find their way into our production cars."

JOHN EVANS

UNDER THE SKIN
JESSE CROSSE

KOENIGSEGG'S INGENIOUS TRANSMISSION SOLUTIONS

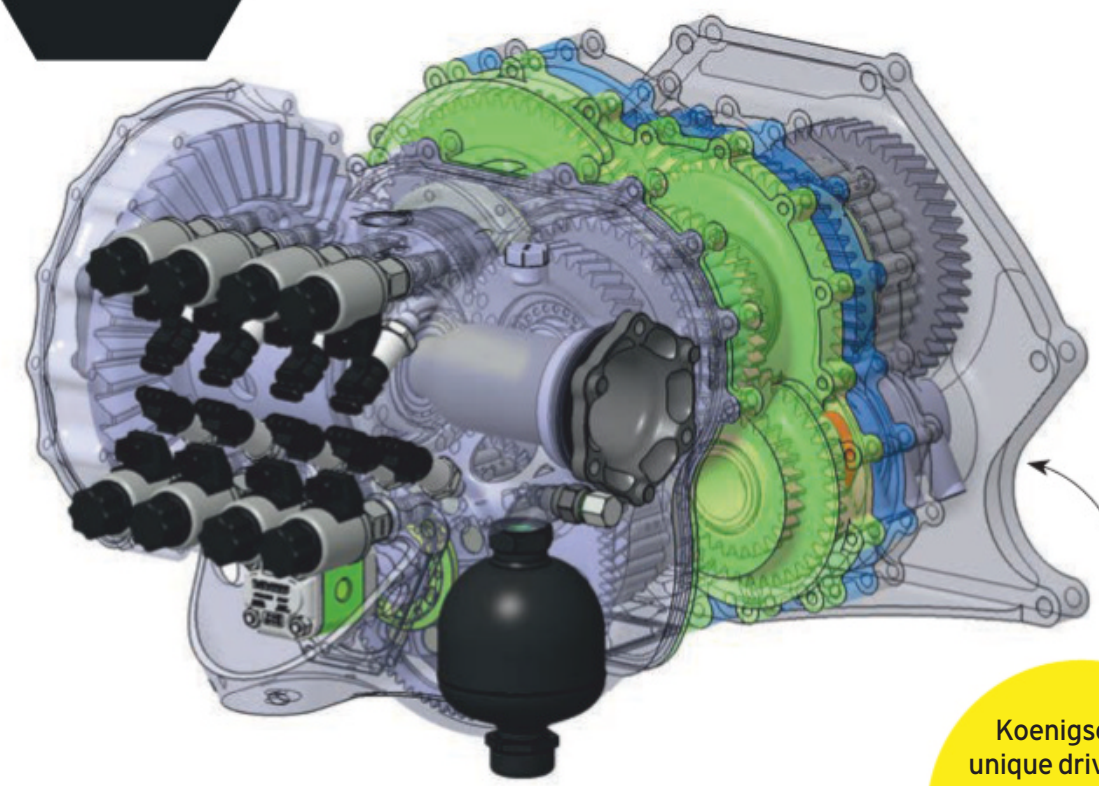

Koenigsegg's unique drivetrains break with conventional thinking, albeit for a lot of money.

KOENIGSEGG WON'T SAY what, but it will hopefully reveal something special on the morning of 3 March at this year's Geneva motor show. Rumour has it the Swedish supercar maker, known for its highly innovative drivetrains, will reveal a production car concept capable of breaking the 500km/h barrier (a smidge over 310mph).

Koenigsegg currently employs two bespoke transmission technologies in its existing models, neither of which exists in mainstream production cars. The question is which, if either, will be used to help raise the speed record bar yet higher.

The first is the Koenigsegg Direct Drive (KDD) fitted to the Regera, which does away with selectable gear ratios altogether. However, it's not a continually variable transmission (CVT); instead, it blends three electric drives with power and torque from the engine via a Hydracoup, a special type of torque converter developed in-house.

The axial flux electric motor-generators are supplied by British specialist firm Yasa and integrated into the drivetrain at Koenigsegg. These units are larger in diameter but much shorter than conventional radial flux motors, so they resemble biscuit tins. Two Yasa 750 units fit either side of the rear axle final drive, producing 1180lb ft of torque each. The third, a Yasa 400, is mounted on the engine's crankshaft. This produces 258lb ft and fills any torque gaps in the operating range.

The fixed final drive ratio is equivalent to the Agera's seventh gear, at 2.73:1, but the engine produces 1085bhp and 922lb ft in its peak operating range and nothing at 0rpm. Without something to replace conventional gears, then, it would be impossible to even pull away, so the powerful electric motors add another 661bhp and 2618lb ft from standstill.

At around 3500rpm, the engine starts to come into play, feeding in torque via the Hydracoup until it locks up to provide a direct mechanical drive to the wheels.

A motorsport-grade battery capable of discharging and recharging 10 times quicker than a regular production car battery supports the powerful electric drive.

The KDD was first shown in 2015, while the Light Speed Transmission (LST) was revealed as part of the Jesko in 2019. Koenigsegg says this nine-speed multi-wet-clutch gearbox is capable of shifting much faster than a conventional dual-clutch transmission (DCT), partly because it can make simultaneous changes between any forward speeds, whereas DCTs need to predict and preselect the next gear.

If the driver changes his or her mind, the DCT has to deselect and reselect, causing a slight interruption of torque to the wheels. DCTs are also sequential, so can't skip gears, whereas the LST's multi-clutch system can select the right gear instantly, bypassing several ratios if needed to meet the demand.

It's unlikely that either design will make it into the mainstream, mainly because of cost, but that doesn't detract from the deliciousness of the engineering. Which one will make it to Koenigsegg's next step? Maybe neither, but it's sure to be a treat for tech fans everywhere, whatever it is.

FROM OXFORD TO MARANELLO

A front-wheel-drive supercar? Ferrari also went for a tri-motor set-up in its most powerful road car yet, the 986bhp SF90 Stradale plug-in hybrid. One motor works in tandem with the engine, while the others power the front axle for driving in electric-only mode, giving a modest zero-emissions range of 16 miles at speeds of up to 84mph. These motors are also supplied by Yasa.

Volkswagen now asks its customers to choose from four levels of data privacy

ANALYSIS

Car makers want your data

Motorists can unlock helpful in-car features by waiving their right to privacy

How private are you on a scale of one to four? That seems like a random question, but it's one the Volkswagen Group is posing to owners signing up to the We Connect app-based feature it's now rolling out across its range.

Think carefully about your answer, because it determines both what happens to your data and how many features to which you're given access. If you're very private, you could be locked out of even what we now think of as basic features.

All new cars sold across the European Union since 2018 by law must be connected in order for them to be able to automatically contact emergency services in the event of a crash. So, with an embedded SIM card now mandatory, manufacturers are eagerly exploring what else they can do with this wireless connection to your car.

"E-call has been the main driver for us to get the car connected. Now it is, we see many opportunities from this perspective," said Luigi Ksawery Luca, director of mobility and connected car at Toyota Europe.

Depending on the company, those opportunities range from sending automatic map updates or harvesting data on the car's health through to radical upgrades that can unlock autonomous features.

Car makers face a dilemma, though. They want to access that valuable data, but they also need to follow the EU's strict General Data Protection Regulation (GDPR), which also forms part of the UK's Data Protection Act 2018. Hence Volkswagen's questions.

The German company's four levels are Maximum Privacy (which even deactivates e-call until the event of a crash), No Location, Use Location and Share Location. On that final level, "all mobile services are activated" and those services are listed using your location – for example, Amazon Alexa, live electric vehicle charging locations, live traffic information and voice control (which works far better when linked to 'the cloud').

"A trade-off makes the most sense," said Brian Rhodes, associate manager for connected car at analyst firm IHS Markit. "They say 'here's the value in exchange for X, but I'm not going to give the value if you don't want to give me X'."

Volkswagen's four-tier system is directly the result of GDPR, believes Rhodes. "It's incredibly important they get it right, because there are significant ramifications if there's a breach," he said. "There are teeth to GDPR:

E-call is a legal requirement on new cars sold in the EU

the penalty is significant."

The risk of your data leaking is becoming greater, however, because it's no longer always held by just the car company. "It's a cost issue. If you have your own servers with a lot of data, you need to maintain that," said Mike Peters, head of connected car at infotainment specialist Harman.

Many car makers, including the Volkswagen Group, use Amazon Web Services, which is by far the biggest player in this field. Even data from advanced driving systems (ADAS) isn't ring-fenced the way it once was.

"Your system and algorithms are getting better if you have a better scale of data, so it's best not to protect it, because you need tons of it," said Peters.

Once data leaves the digital confines of a car company, it can stray. For example, a cybersecurity company last year discovered a terabyte of unsecured data from Ford held by a third party on Amazon's cloud computing servers.

However, restricting or siloing data simply isn't an option any more; not only is it useful for making better cars in future, but it could also be key to boosting income at a time when profits are being stretched like never before.

Take the example of mapping road networks. "When I was at [radar tech firm] Navtech, they paid well in excess of a billion dollars to generate the original map data," said Andrew Poliak, now chief technology officer of automotive for Panasonic North America. "Now cars have high-resolution cameras and lane-precise GPS, you can suddenly map the 3D world for autonomous applications a lot better, just from your customers. All they have to do is tick a box saying 'will you share with us data coming off the vehicle?'."

However, manufacturers are realising that this consent is becoming more and more valuable. "You need to provide some value back," said Poliak.

If we're happy with the trade-off and press the 'share location' consent button, what then happens to that data? Amazon reckons it has an answer in the Quantum Ledger Database, an unchangeable way of recording our consent level even as our data gets sold, possibly dozens of times.

We need to be more vigilant when we sell our cars, too. The advice of the UK's National Cyber Security Centre is to treat a car as you would a phone and wipe all the data from it. That would protect against known cases where the first owner can continue to use an app to unlock the car and track journeys even after it's sold, simply because the car hasn't been delinked from the app.

As the potential consequences of data misuse continue to grow, the amount of consent we give may become one of the most powerful tools we as customers have.

NICK GIBBS

Volvo and Geely consider merger

VOLVO AND PARENT company Geely will explore the possibility of merging into a single entity in order to become more competitive in the global new car market.

The Swedish manufacturer has been majority-owned by Chinese giant Zhejiang Geely Holding Group since 2010 but remains separate from Geely Automobile Holdings. Other Geely-owned brands include Lotus, Proton, LEVC, Lynk&Co and Geometry, while Volvo spin-off Polestar is jointly owned by the two.

The proposed deal would merge Volvo with Geely Automobile Holdings. The firms say the deal would "accelerate financial and technical synergies" and give the "scale, knowledge and resources to be a leader in the ongoing transformation of the automotive industry". They added that any deal would "preserve the distinct identity" of each brand.

A proposal will now be developed and sent to the boards of the two firms. A Volvo spokesperson told Autocar the aim is to finalise the creation of the new group by the end of this year.

Volvo and Geely already benefit from considerable shared hardware, including and CMA and SPA platforms, and are in the process of combining their combustion-engine divisions into one.

The spokesperson added the deal would allow Volvo to "invest in new technologies, such as electrification, connectivity and self-driving technology", thanks to more joint technical development and production facilities – vital for it to stay competitive with giants such as FCA-PSA and the Volkswagen Group.

The merger could also grant Volvo access to extra production capacity at Geely factories in China and aid Geely's attempts to expand its brands into Europe.

Damien Smith

RACING LINES

Six years in, Formula E is still struggling to attract a significant following

RED RAG TO a raging bull alert: is the best hope of a bright future for Formula 1 a partnership with Formula E? Right now, the two codes are light years apart in terms of speed and popularity. But the thought occurred to me, not for the first time, in the wake of the government's new deadline for zero-emission motoring by 2035. If fossil-fuelled cars really are to be obsolete just 15 years from now, motorsport – and most of all F1 – is in a race against time.

So, will motorsport be wiped out? I don't think so. It will adapt, as it always has. The grassroots can still thrive, with historic and club racing existing perhaps as archaic pastimes – like steam railways today.

For the high-end sport, the penny has already dropped. Le Mans is active in alternative fuel research, including hydrogen; the World Rally and British Touring Car championships are pursuing hybrid futures; and this week a European electric touring car series has been launched (watch this space for more).

But F1? By far the best-known form of motorsport, it will always be in the direct line of fire. Its new sustainability targets are a start, and the current turbo hybrid powerplants are underrated things of wonder, but only a synthetic fuel revolution will thwart what is surely an inevitable move to full electrification.

Formula E is proof that that time is not yet here. The electric single-seater series, now in its sixth season, remains hugely divisive: its cars are too slow, even on its tight pop-up city street circuits. But it does have major clout: Germany's 'big four' of Audi, BMW, Porsche and Mercedes have all bought in, as have Nissan-Renault, Jaguar and PSA. Like it or loathe it, the series is a pioneering beacon. And as the old cliché goes, motor racing is like war: the perfect living lab in which to develop technology at speed.

Over the course of this new decade, Formula E will get faster, fitter, better and stronger. What it lacks is the audience and deep heritage of F1, and that can't be manufactured. But perhaps it can be bought, in the form of a coalition.

Agendas are at play – of course they are – and F1 has always gone its own way, even if it grudgingly accepted long ago that 'relevancy' is essential for its survival. But starting down the same road from scratch is illogical when Formula E is learning the hard lessons already. Joining forces makes sense – but that doesn't mean it will happen.

> "Over this decade, Formula E will get faster, fitter, better and stronger"

GET IN TOUCH
autocar@haymarket.com

MOTORSPORT IMAGES

Up close and personal at the world's most exclusive race meeting

JOIN THE GRRC FELLOWSHIP

Being able to buy tickets to the GRRC-only Members' Meeting is just one of the many benefits available to the Fellowship.

28-29 MARCH 2020

For more information visit **goodwood.com/78MM**

78TH GOODWOOD MEMBERS' MEETING

Steve Cropley

MY WEEK IN CARS

Ranger Raptor was the subject of another kind of extinction rebellion

Sporting trials champ Julian Fack in action

MONDAY

Snap! When they announced that not only new petrol and diesel cars but also new hybrids were in line for the chop from 2035, something clicked in my brain. That's it, I thought. I'm buying a Ford Ranger Raptor – to enjoy a rebellious experience because one day it won't be possible. Those with long memories might remember that when the mighty load-toter first appeared, I was beguiled by its refinement, comfort and comparative steering precision. So at the beginning of the week, before our Raptor left our long-term test fleet (see p64), I hounded Mr Prior (its custodian), grabbed the keys and set off hot-foot for best-loved roads beyond London's orbital M25 to test the decision, made at an hour's notice, that this would be my next silly car.

It won't be, and I'm over it now. The Raptor surprises – even amazes – with its lack of wind and road noise, its decent ride comfort and great seats, plus the quick responses a 10-speed auto 'box confers on a huge machine with (relatively speaking) not much engine. But it's too big, I'd never get around to using it and £50k is too much dosh for the starving hack. But for a morning, the thought was enjoyable.

TUESDAY

Cheery pre-season lunch with British Touring Car Championship boss Alan Gow, ostensibly to agree our new contract as 2020 BTCC media partners but mainly to enjoy one another's tall tales and hear details of the new racing season. The BTCC is well known for gently tuning its regs as the seasons roll, but it seems little will change this year or next.

The next big push will come in 2022 when race cars are hybridised, with an assist motor grafted to every gearbox allowing the driver a 'push to pass' or 'push to defend' capability whose effectiveness will depend on how well they've stored regenerated energy in a standard battery. Gow hates formal contracts, so over pizza we shook on a two-year deal – so long as it included an annual lunch. What better way to do business?

> "That's it, I thought. I'm buying a Ford Ranger Raptor"

WEDNESDAY

Fancy some competition driving instruction from a world champion? If yes, your moment is fast approaching: legendary sporting trials driver Julian Fack, winner of the British (read world) championship more times than anyone can remember, is staging a pre-season training day for novice drivers on 7 March, starting in the public car park at Shelsley Walsh hillclimb, near Worcester. For a paltry £60 (plus the production of a new RS Clubman competition licence: get yours in the post from Motorsport UK) you share day-long driving in a fully competitive trials car with another newbie, under full instruction.

Sporting trialling is a fascinating, high-concentration sport involving tiny, simple but sophisticated clubman-like cars that tackle steep, loose, tight, usually muddy off-road courses that look impossible to the naked eye. Just maintaining forward motion requires judgment, anticipation and some counterintuitive driving techniques, but the rewards are enormous. Having tried it years ago, I promise fascination and exhaustion in equal measure. Full details at btrda.com (tinyurl.com/vdc9q6d).

FRIDAY

Since rushing into print with a story last week on the new Ford Puma, I've had time for some more driving. I stick to my guns about the knobbly ride on 18in wheels (several Autocarists demur) but I'm even more deeply impressed with the car, one of those rare models with honest-to-God star quality. Ford used to specialise in 'cooking' models like this but, Fiesta aside, hasn't done it lately. The Puma's styling, packaging, handling, interior treatment and charming 1.0-litre three-pot engine all signal a welcome return to form.

AND ANOTHER THING...

Audi has a new screen-based gizmo for all who wonder exactly how today's cars are made: an interactive tour of its Ingolstadt bodyshops. Go online at audi.stream to book a place and time. The tour takes 20 minutes and even comes with a live guide to answer questions.

GET IN TOUCH
steve.cropley@haymarket.com @stvcr

CHRIS PHILLIPS

GENERIC
GENERIC
GENERIC
GENERIC
GENERIC
GENERIC
ICONIC

SWITCH IT UP

THE ALL-NEW CORSA WITH UP TO 70MPG

Search New Corsa

Fuel economy# and CO_2* results for the New Corsa range: Combined mpg (l/100km): 45.6 (6.2) – 70.6

#Fuel consumption figures are determined according to the WLTP test cycle. *CO_2 emissions figures are determined according to the WLTP test cycle however, a Government is then applied. Figures are intended for comparability purposes only. The fuel consumption you achieve under real life driving conditions and CO_2 produced will depend upon CO_2 with other vehicles tested using the same technical procedures. For more information contact your local Vauxhall Retailer.

VAUXHALL

(4.0). CO_2 emissions: 99 – 85g/km.

formula is then applied to translate these figures back to what they would have been under the outgoing NEDC test cycle, which WLTP replaces. The correct tax treatment
a number of factors, including the accessories fitted after registration, variations in driving styles, weather conditions and vehicle load. Only compare fuel consumption and

FIRST DRIVES

NEW CARS TESTED AND RATED

TESTED PORTUGAL **ON SALE** MARCH **PRICE** £37,255

BMW M235i GRAN COUPE

With a front-wheel-drive platform and four-cylinder propulsion, is this all-new four-door 2 Series worthy of its M badges?

There's an M badge on the back and a suitably weighty number next to it, yet the new M235i Gran Coupé isn't what could be termed a traditionalist's choice. Like the M135i hot hatch, it's based on BMW's natively front-driven FAAR architecture, with power coming from a four-cylinder engine in place of the sonorous straight six that still propels the M240i Coupé. That means lifting the bonnet of this four-door 2 Series reveals the incongruous sight of a short engine sitting across the bay and mounted entirely ahead of the front axle line.

This is a detail that will offend some people, possibly to the point of rage, but it'd be unfair to turn this first review into an ethical inquisition into the company's bold new direction. After all, Mercedes has been making AMG versions of its similar-deal CLA coupé-saloon since 2013, with the recently launched CLA 35 being the M235i's most obvious competitor.

Both make slightly more than 300bhp from a heavily boosted 2.0-litre four-cylinder engine and send drive to each corner through a part-time four-wheel drive system. Performance is identical on paper, with both manufacturers claiming a 0-62mph time of 4.9sec and a top speed electronically limited to 155mph. But given our recent disappointment with the way the CLA 35 drives, there seems to be a poorly defended goal here.

While the M135i replaced a rear-driven model, the 2 Series Gran Coupé is entering a new area of the market – one that BMW executives admit they couldn't consider entering by building on the old platform, due to the constraints inherent in packaging an inline engine and gearbox.

Like most coupé-saloons, the 2 Series is designed to appeal more to Asian and American buyers than Europeans, a reality reflected in a chassis tune slightly softer than that of the M135i.

While styling is an especially subjective subject in this part of →

Impressive interior is largely copied from the 1 Series

TESTER'S NOTE
While most interior materials impress, the plasticky gear selector feels below par, with an insubstantial shape and too light an action. That's not really suitable for something wearing M badges. **MD**

the market, it's fair to say that the Gran Coupé's design struggles to deliver grandeur within its compact dimensions. The 2670mm wheelbase is identical to that of the 1 Series, as is the jowly front overhang, with the 207mm increase in length going almost entirely into the boot. The result is a car that doesn't look quite long enough in the middle, an impression exacerbated by the heavily raked roofline. The rear lights also seem to have been designed for a considerably larger vehicle.

The interior is better. The Gran Coupé shares the 1 Series' dashboard and most of its cabin architecture, and the materials feel suitably plush for this segment, with lots of switchgear and componentry familiar from higher up in the BMW range. An 8.8in infotainment touchscreen is standard, as is comprehensive talk-to-anything connectivity. The M235i also gets the Live Cockpit digital instrument pack as standard, as well as semi-bucket seats and Alcantara trim.

Front seat and steering wheel adjustment is generous, and although the rear is short on head room, due to the low roofline, space is sufficient for children and smaller adults. It's fair to say that nobody shopping in this dinky segment is likely to be expecting more. The 430-litre boot is also respectably large, although access through the tailgate hatch is a little tight.

Starting the engine produces a promising fusillade of pops and crackles, but this turns out to be about the most exciting noise the new powerplant makes. It would have been nearly impossible to replicate the sonorous charms of the old six-cylinder M140i, and BMW hasn't really tried to: the engine makes plenty of muscular sounds, some of which are digitally synthesised. Higher revs make it louder but not more melodious.

There's no arguing with the effectiveness of this downsized engine, though. Its peak torque output of 332lb ft is fully present from just 1750rpm, with the quick-thinking automatic gearbox shifting intelligently and seamlessly to wake up the engine when required.

There is some lag below about 2000rpm, but the only way to find it is by manually selecting too high a gear in manual mode. Performance feels at least as strong as the official numbers suggest; the engine pulls cleanly to its 6600rpm limiter with no sense of reluctance at the top end.

Rainy conditions in Portugal also gave the M235i a chance to prove its ability to generate impressive levels of traction on damp mountain roads. The four-wheel drive system uses an electromechanical clutch pack on the rear axle that can engage much quicker than a viscous coupling. It also gets an understeer-fighting ARB slip limitation system based on the one used in the i3 electric car (see panel). So although the M235i can run as a pure front-driver, and frequently does to reduce mechanical losses and boost consumption, it proved almost impossible to catch out, even on tight, slippery corners.

The xDrive system works well to find grip – a point made by just how hard a front-driven 220d diesel had to battle to put its power down on the same roads. But it can only do so much; just 50% of available effort can head backwards, and it reaches the rear wheels through an open differential incapable of torque biasing. Once the M235i has been powered to the edge of breakaway, then, it doesn't have any tricks left in the bag beyond tightening its line on a lifted throttle. So while it actually resists low-speed understeer better than its rear-driven namesakes, it lacks their ability to go and play in the hinterland between grip and slip.

The steering is a highlight, with

Design of the 2 Series Gran Coupé appears rather awkward from any angle

> Don't laugh too hard, but a fully switched-up M235i on a wet, twisty road had me recalling the Lancer Evo

Optional adaptive dampers yield a decent ride, even in firmer Sport mode

better weight and communication than many of BMW's punchier rear-drivers and suffering minimal corruption from the torque passing through the front axle. Responses are keen, but the M235i feels deliberately less front-led than a hot hatch would; FAAR chassis boss Bernhard van der Meer says that matching the response rates between the front and rear axles was a key objective.

The brakes are impressive, too, doing without an electric servo but getting extra-narrow four-pot calipers that allow the largest possible discs to be squeezed behind the standard 18in alloy wheels.

While suspension settings have been softened from the M135i, the Gran Coupé still feels well lashed-down. Our test car was sitting on adaptive dampers – set to be a £500 option in the UK – that feel pliant in their Comfort mode and don't turn harsh in Sport mode. On a stretch of Portuguese motorway, there was a noticeable amount of vertical movement over ridges and expansion joints in the firmer setting, but Comfort turned everything down. The passive damper tune is closer to Sport, according to van der Meer.

Don't laugh too hard, but a twisty wet road in a fully switched-up M235i had me recalling the Mitsubishi Lancer Evolution. The engine doesn't have the same boosty power delivery and refinement is off-the-scale better, but the way the BMW turns in and locks onto a cornering line is definitely familiar. This certainly isn't an association I was imagining making before driving the car.

Changing tastes the world over make the 2 Series Gran Coupé an entirely rational product. BMW's assertion that the majority of buyers won't even realise it's natively front-driven, let alone care about it, is likely to grate with enthusiasts but reflects the truth that got this project signed off. Also the paradox: we might have preferred it with six-cylinder power and rear-wheel drive, but then it wouldn't have been built. With BMW planning to continue with rear-wheel drive for the next-generation 2 Series Coupé and M2 (see p6), the lesson here is probably to live and let live.

MIKE DUFF

KEIN UNTERSTEER THANKS TO ARB

BMW's near-actuator wheel slip limitation system (which emerges from German as ARB) will be fitted as standard to all 2 Series Gran Coupé variants to limit understeer and improve traction. Most cars limit wheelspin through their electronic stability control systems when excess speed is detected, with the system calculating a target engine torque and passing on this instruction to the ECU. ARB was originally developed for the i3, because the much higher reaction speed of an electric motor required a quicker-acting system. The slip controller is now integrated directly into the engine controller, removing the intermediate stages and improving response time by 300%. Although designed primarily for front-wheel-drive cars, ARB is cited as one of the reasons for the M235i's impressively disciplined front end.

The M235i uses the same 'B48A20' engine as the M135i and Mini JCW GP

BMW M235i xDRIVE GRAN COUPE

Behind the strange exterior design of the four-door 2 Series is a well-engineered car, if a confusing one

★★★½☆

Price	£37,255
Engine	4 cyls, 1998cc, turbocharged, petrol
Power	302bhp at 6250rpm
Torque	332lb ft at 1750–5000rpm
Gearbox	8-spd automatic
Kerb weight	1570kg
0-62mph	4.9sec
Top speed	155mph (governed)
Economy	36.2-37.2mpg
CO_2, tax band	153-162g/km, 35-37%
RIVALS	Mercedes-AMG CLA 35, Audi S3 Saloon

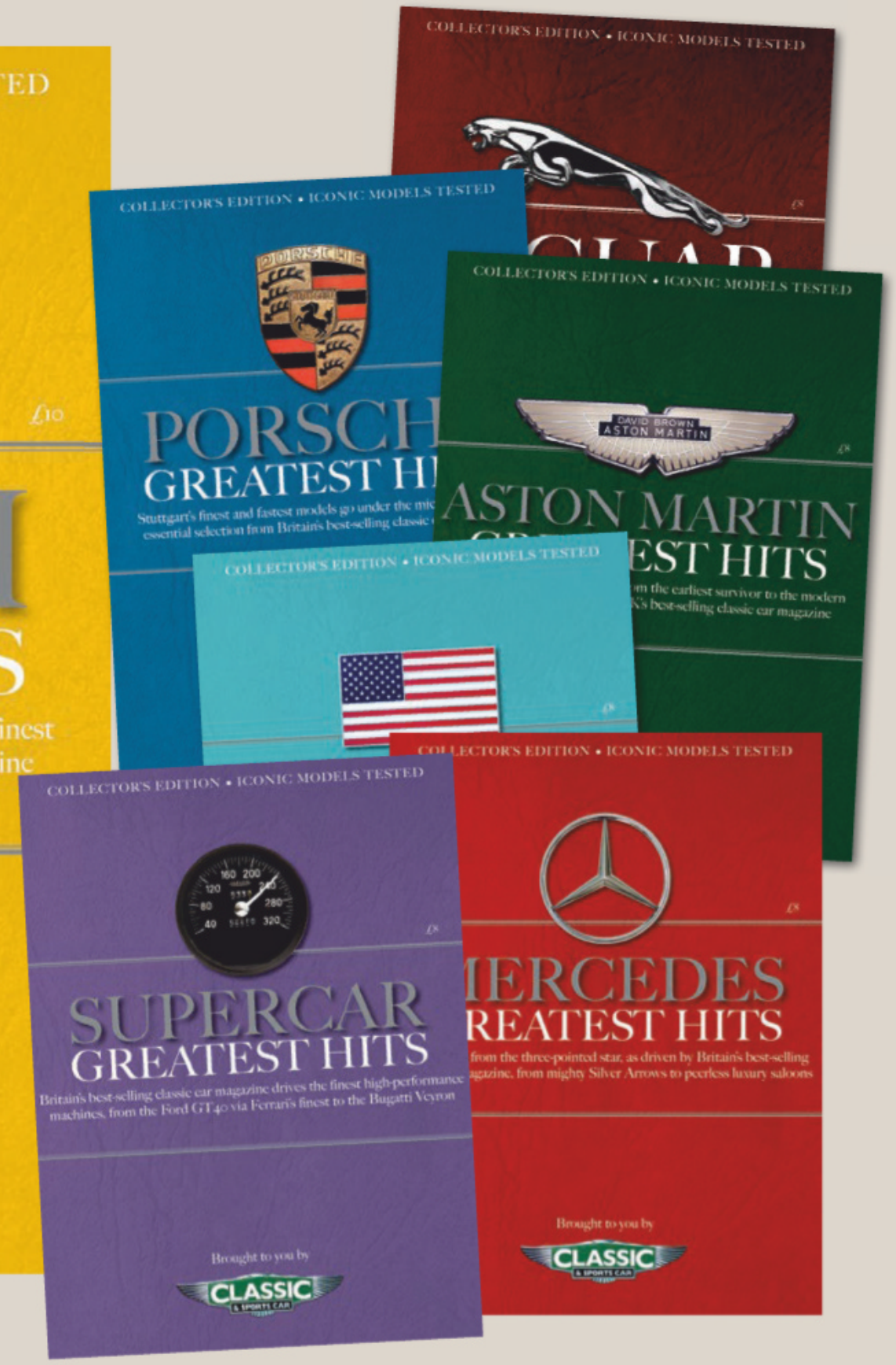

CLASSIC & SPORTS CAR

ALSO IN THE *GREATEST HITS* SERIES: JAGUAR, PORSCHE, ASTON MARTIN, AMERICAN CLASSICS, MERCEDES, SUPERCARS & FERRARI

Order your copies at **www.magsdirect.co.uk/cscjag, www.magsdirect.co.uk/porsche, www.magsdirect.co.uk/aston, www.magsdirect.co.uk/american, www.magsdirect.co.uk/mercedes, www.magsdirect.co.uk/supercar** and **www.magsdirect.co.uk/ferrari**

AVAILABLE NOW!

TESTER'S NOTE
Initially, all cars will be manual, but the optional seven-speed PDK automatic is expected to arrive in late 2020. **JD**

TESTED 7.1.20, ESTORIL, PORTUGAL **ON SALE** APRIL

PORSCHE 718 BOXSTER GTS

Volume-produced roadster gets six of the best – and without a turbocharger in sight

Ah, that's better. Simply turning the key in the ignition is all it takes to confirm that the new Porsche 718 Boxster GTS is already on the right track. In place of a chuntering, sub-Subaru soundtrack, there's now real mechanical musicality, the engine sited just over your shoulder once again emitting a familiar hollow bark as it fires into life. That's right: a naturally aspirated flat six has returned to mainstream versions of the firm's mid-engined roadster.

Porsche won't admit that its four-cylinder philosophy has failed (turbocharged fours remain in the standard, S and T versions) but, having developed a bespoke flat-six engine for the Motorsport division's Boxster Spyder and Cayman GT4, it seemed, well, a shame to restrict its use. So now we have that 4.0-litre in the Boxster GTS and Cayman GTS, the models that have traditionally straddled the line between hardcore driving fun and everyday usability to brilliant effect. We drove a Boxster on the road and the results were pretty special.

But first, that engine. This isn't some diminished version of the Motorsport engine but exactly the same unit. The rev limit has been lowered to 7800rpm and maximum power of 395bhp (19bhp less than the GT4) is delivered 800rpm earlier, but that's about it. It delivers an identical 310lb ft at 5000rpm and exhales through the same twin-exit exhaust system. Even the six-speed manual gearbox is the unchanged.

On the move, it's an absolute joy. Not only does it sound fantastic as it yelps and howls its way energetically to 7000rpm, but it also punches hard, with much of the torque available from just above idle. And the throttle response is spot on, each twitch of your toe resulting in a precisely proportional increase in acceleration. The gearshift is beautifully weighted and precise, too. In the real world, the GTS feels every bit as quick as the Spyder, as evidenced by a 0-62mph time that's just a tenth slower.

There's less carried over in the chassis. The GTS goes without rose joints and some stiffening components and its less steamroller-section rubber (235 front and 265 rear) results in a fractionally narrower track. It also has smaller brakes: 350mm front discs versus 380mm for the Motorsport car. What remains are the active engine mounts, adaptive dampers and torque-vectoring limited-slip diff.

With less aggressive damping, the GTS breathes more easily with the road than a GT4 and the subtle increase in softness means that what you lose in ultimate sharpness you gain in an ability to more confidently work up to and over the limit of grip and exploit that perfect natural balance. And because all-out adhesion is a little lower, you can more frequently use that glorious motor's muscle to subtly alter your line with the throttle.

The steering is excellent, too. It's not scalpel sharp, but it allows you to load up the suspension precisely and it's chatty enough to let you know what's going on without becoming a distraction. Even the smaller brakes are exceptional. And like all Boxster models, the shell is stiff, pretty much matching the Cayman for rigidity.

However, what the GTS does really well is to combine this near-Spyder performance and handling virtuosity with an easy-going everyday mien. The more rounded damping means a more forgiving ride, while the narrower tyres and softer bushing eradicate the Spyder's occasional games of hunt the camber. The interior is more comfortable, too. But the real kicker is that the GTS versions of the Cayman and Boxster cost a healthy £10,000 less than their hardcore siblings.

JAMES DISDALE
@jamesdisdale

Seats and long roster of standard kit enhance cabin comfort but the driving experience leaves the biggest impression

PORSCHE 718 BOXSTER GTS

Its flat six and blend of thrills with daily habitability mean this could be the sports car bargain of the decade

★★★★★

Price	£65,949
Engine	6 cyls, 3995cc, petrol
Power	395bhp at 7000rpm
Torque	310lb ft at 5000-6000rpm
Gearbox	6-spd manual
Kerb weight	1405kg
0-62mph	4.5sec
Top speed	182mph
Economy	25.9mpg
CO_2, tax band	246g/km, 37%
RIVALS	Alpine A110 S, Jaguar F-Type P300, Lotus Exige Sport 350

Protecting your investment

With 5 Star GAP Insurance and RAC Warranty

ALA is one of the largest independent suppliers of **GAP Insurance** in the UK. We pride ourselves on providing the highest levels of customer service and the best GAP Insurance products at competitive prices. Visit **ala.co.uk** to find out more.

Official Partner of AUTOCAR

RAC Warranty

ALA GAP & Warranty Provider

TESTED 30.1.20, OXFORDSHIRE **ON SALE** NOW

PEUGEOT 2008

Yet another Juke rival – but one that's unusually interesting

They say that good things come in small packages. They also say that too much of a good thing can, well, sort of be a bad thing. So does that mean that a large collection of small packages might be something we should be mildly concerned about?

They (whoever they might be) don't seem to have any pearls of wisdom on the subject, which is probably a good thing if you're in the compact SUV-making game. Peugeot's latest creation is the second-generation 2008 and, based on interior and exterior style appeal alone, it could well be one of the most desirable of its type yet.

The 129bhp Puretech GT Line is expected to be the best-selling model. It's priced from £26,100, placing it in the same ballpark as the similarly well-specced, 148bhp Volkswagen T-Roc 1.5 TSI SEL but quite a way above the top-flight 1.0-litre Nissan Juke – prominent players both in this ever-expanding segment.

To drive, the 2008 is really rather pleasant. It changes direction with a pleasing amount of energy, grips well and keeps its body smartly in check. While you wouldn't call it enthusiastic, it doesn't feel devoid of character either.

There's perhaps a slight edge to its ride at everyday speeds but, for the most part, it manages Britain's roads with reasonable confidence, only really feeling brittle over particularly cratered stretches of asphalt.

It's certainly better-riding than its DS 3 Crossback relation, in any case, and it settles down nicely on the motorway to become a usefully comfortable long-distance cruiser.

Meanwhile, the 1.2-litre three-cylinder turbo petrol engine is a willing workhorse whose 170lb ft of torque endows the 2008 with enough muscle to make it an extremely easy car to drive. It doesn't have the zing or effervescence of Ford's 1.0-litre Ecoboost units, but its isolation and refinement is nonetheless very impressive.

While it remains difficult to get excited about the concept of a compact crossover, Peugeot is to be commended for its efforts to make a car that backs up its style appeal with meaningful substance.

SIMON DAVIS
simondavisnz

Interior looks appealing and is of impressively high perceived quality

PEUGEOT 2008 PURETECH 130 GT LINE

Refined engines and energetic handling help mark this out as one of the better compact SUVs to drive

★★★★☆

Price	£26,100
Engine	3 cyls, 1199cc, turbocharged, petrol
Power	129bhp at 5500rpm
Torque	170lb ft at 1750rpm
Gearbox	6-spd manual
Kerb weight	1192kg
0-62mph	8.9sec
Top speed	122mph
Economy	43.7-50.6mpg
CO_2, tax band	WLTP figures tbc
RIVALS	Nissan Juke, Volkswagen T-Roc, Citroën C3 Aircross

AUDI RS6 AVANT

Price £92,750 **On sale** Now
What's new? Fastest and most sophisticated RS6 yet is driven in the UK for the first time

THE AUDI RS6 has always been popular with well-heeled enthusiasts who like to travel fast yet discreetly. This aggressively penned new estate model doesn't fly as low under the radar as its predecessors, but it's even more effortlessly athletic.

Scorching pace from the 591bhp 4.0-litre V8 is a given; less expected is the comfortable ride on optional coil-sprung RS Plus suspension, or the extra agility afforded by standard four-wheel steering – although the car still feels big for British roads.

Either way, for shattering all-weather pace, refinement, luxury and practicality, the beautifully executed RS6 remains unrivalled. **JD**
★★★★☆

BMW M340i TOURING

Price £50,245 **On sale** Now
What's new? Munich's baby estate gets six-pot petrol power and more focused handling courtesy of M Performance

BOOTLID BADGE ASIDE, not much distinguishes the M340i from a regular 3 Series. Adaptive suspension delivers a largely comfortable ride, and the 3.0-litre turbocharged petrol engine (the only six-pot in the range) is refined at slow speeds.

Stretched out to its 6800rpm limit, though, it delivers an intoxicating level of acceleration. This is accompanied by an enthusiastic tone which, while not as angry as that of a true M car, comes alive as you explore the upper end of the rev range.

Comfortably more dynamic than the Audi S4 Avant (although perhaps not as economical) and better equipped inside than the Mercedes-AMG C43 Estate, few junior wagons can claim to be quite so entertaining. **TM**
★★★★½

READ MORE ONLINE
autocar.co.uk

PHOTOGRAPHY OLGUN KORDAL

Rolls-Royce Cullinan

Goodwood's super-luxury SUV finally braves the road test microscope

MODEL TESTED **BLACK BADGE**

Price £306,935 • **Power** 591bhp • **Torque** 664lb ft • **0-60mph** 4.9sec • **30-70mph in fourth** na • **Fuel economy** 18.6mpg • **CO_2 emissions** 343g/km • **70-0mph** 48.0m

We like

- Mechanical refinement and high-speed ride comfort are as good as Rolls' finest
- The Lounge seating option makes for true SUV cabin versatility
- Grips and handles surprisingly well, if you're committed enough to find out

We don't like

- Maligned 'London taxi' looks don't soften much first hand
- Black Badge performance tweaks are something of a blind alley
- Doesn't dominate rivals in quite every way it ought to for the money

Park your indignation for a moment. The Cullinan might be yet another obscenely large and heavy capitulation to the market's appetite for SUVs but, in the world of ultra-premium manufacturers, Rolls-Royce stands on firmer ground than any other in terms of precedent.

From 1914, armoured cars built upon its Silver Ghost chassis were equipped with water-cooled .303 Vickers machine guns and sent to serve in the First World War. Squadrons a dozen strong made it as far afield as the Middle East, where they helped TE Lawrence conquer Turkish forces in the desert. "More valuable than rubies" was how Lawrence of Arabia famously described these fantastically ugly 7.5-litre 4.7-tonne machines and, in one form or another, Rolls-Royce's front-line service endured until 1941.

Even during the time between Rolls-Royce's 1904 founding and its involvement in conflict, its vehicles often functioned as what would now be called SUVs. They had to be luxurious and reliable but were expected to deliver those attributes on often appalling 'road' surfaces. Fitted with shooting brake bodies, they also provided motorised support for the many off-road activities of the privileged. European aristocracy needed ground clearance and roomy cabins for hunting excursions and one Indian maharaja later ordered his 1925 Phantom with taller wheels, searchlights and an elephant gun mounted on the rear bumper.

We think it's unlikely modern Rolls-Royce would entertain such a request (although surely it receives them from time to time) but the 6.75-litre 2.7-tonne Cullinan nevertheless has true utilitarian lineage. And even if it didn't, as the management watched the Bentayga instantly outsell all Bentley's other models combined, and the Urus double Lamborghini's output in its first year, an SUV must have seemed from a commercial standpoint the only sensible option for the brand. So that is what we now have.

DESIGN AND ENGINEERING

★★★½☆

Rolls-Royce has a fine history of producing motor vehicles whose imposing designs tread the line between aristocratic glamour and ostentatious vulgarity with graceful effectiveness. With the Cullinan, however, it seems this delicate sense of visual balance has been knocked off kilter.

Proportions are key in this respect. At 5.34m long and 2.0m wide, the Cullinan is shorter and narrower than the Phantom VIII, but its extended roofline and lofty 1.82m height serve to stretch Rolls-Royce's imperious design language past the limits of what can be regarded as universally tasteful, which is probably the point. This Black Badge model – with pseudo-sporting styling cues that include red brake calipers, a black chrome Spirit of Ecstasy and darkened Pantheon grille – only solidifies this impression.

The mechanical specification of Rolls-Royce's first 4x4 is far easier to appreciate. In standard guise, the Cullinan's 6.75-litre twin-turbo petrol V12 has been reworked to develop 563bhp and 627lb ft, but this is raised to 591bhp and 664lb ft for our Black Badge model. Drive is delivered to all four wheels in a 50:50 split via strengthened drive- and propshafts, and an eight-speed ZF automatic gearbox. This has a unique calibration for Black Badge models, with a more urgent throttle response.

Meanwhile, the all-aluminium 'Architecture of Luxury' spaceframe first seen in the Phantom VIII has been reproportioned and adapted to feature a tailgate for the first time on a series-production Rolls. Underneath it are active four-wheel steering and 48V active anti-roll systems, too.

Suspension is by way of specially developed axles: a new double-wishbone arrangement at the front axle, with a multi-link configuration at the rear. Larger air struts with greater volume were added to the company's existing self-levelling air suspension system for improved off-road shock-absorbing capability and an electronically controlled air compression system can increase pressure in the shocks to lower →

Range at a glance

ENGINES	POWER	FROM
6.7 Cullinan	563bhp	£252,000
6.7 Cullinan Black Badge	591bhp	£306,935

TRANSMISSIONS
8-spd automatic

Customers who move in the rarefied atmosphere where new Rolls-Royces are sold don't use anything as ordinary as equipment levels with which to define their cars. Through its Bespoke Collective, the company will do its best to produce any kind of equipment or accessory in your car that you can design, conceive of or might have a use for. You can also commission your own paint colour, should none of the available 44,000 'ready to wear' hues be suitable.

The firm's Black Badge extra-special design and performance treatment, as featured on our test car, first appeared with the Wraith in 2016 and has since been applied to the Ghost and Dawn.

All-terrain Rolls-Royces served 1914-41

● The black on silver colour scheme of the classic Rolls-Royce 'Double R' badge has been inverted for these edgier Black Badge models. It looks delightfully inappropriate when caked in mud.

● Spirit of Ecstasy is finished in high-gloss black chrome, which extends to its mounting plate. The iconic mascot can retreat into the bonnet when the car is locked.

● Vertical bars of the grille are polished to reflect the surrounding blackened surfaces. Rolls-Royce says this helps to create a "frisson of movement" that hints at the car's dynamic intent. Quite.

● This 22in wheel design is unique to Black Badge models and features a gear-like graphic. White centre caps and red brake calipers look a bit misplaced on a contemporary Rolls.

Weights and measures

DIMENSIONS

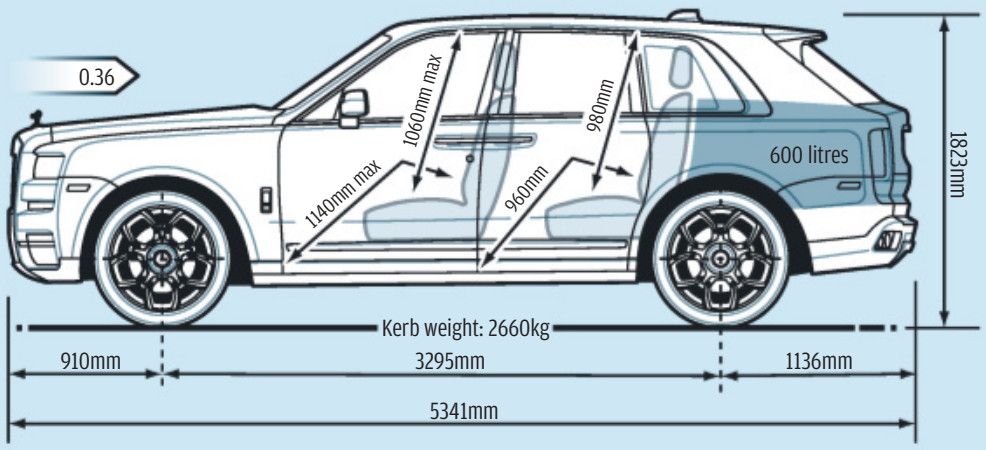

PARKING

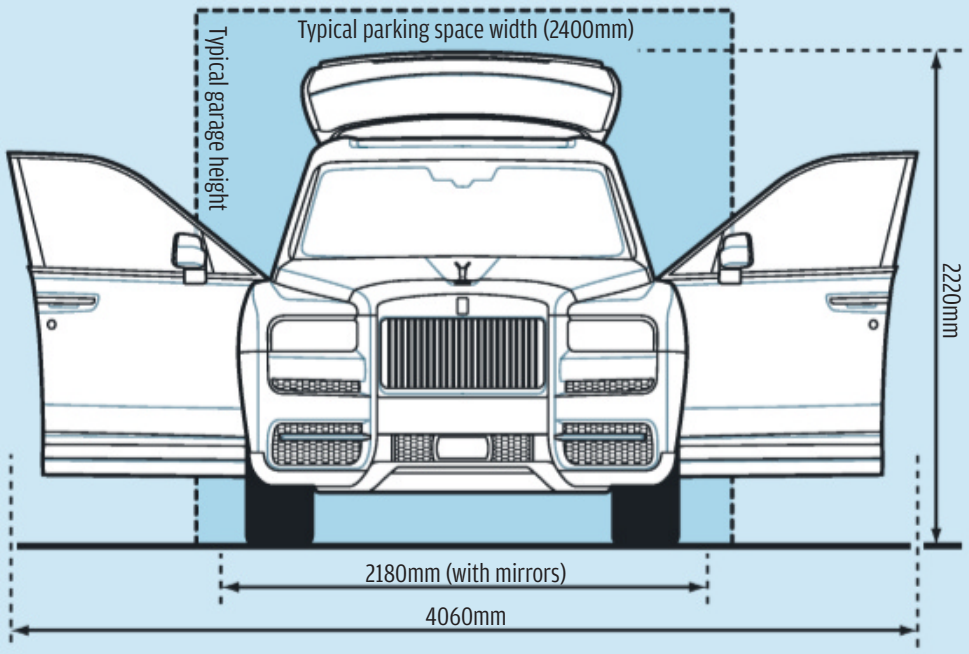

WHEEL AND PEDAL ALIGNMENT

Lots of room here around ideally placed pedals, which you come at from an SUV-typical, semi-recumbent angle. Steering column offers plentiful adjustment for the generously sized tiller.

HEADLIGHTS

First-rate even by the highest standards of today's LED lamps thanks to their standard-fit BMW Laserlight technology. Huge high-beam range, excellent active beam functionality.

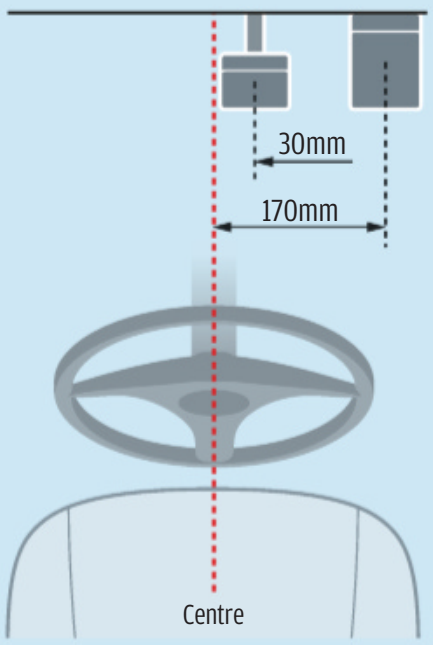

● Oversized wheel and column stick shifter are both Rolls-Royce hallmarks and grant plenty of the right sense of occasion. Visibility is excellent.

● Individual back seats or these Lounge seats are both available. Passenger space is absolutely limo-like either way.

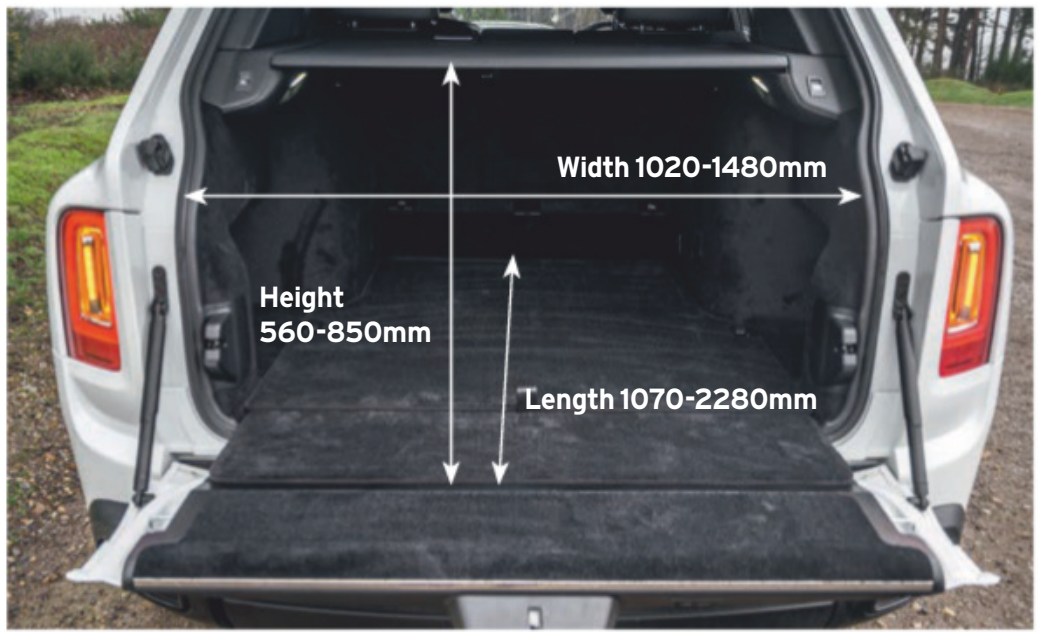

● Boot offers up to 600 litres before you fold the seats and over 2.2m of load length – more than in a long-wheelbase Range Rover, Rolls-Royce claims – with them folded.

← a wheel if it detects lost traction. Meanwhile, the brake pedal's bite point has been raised, its pedal feel retuned to aid confidence during fast driving, and greater brake cooling capacity has been provided.

The upshot of all that is a car that weighed 2739kg on the scales, which is heavyweight even by super-luxury class standards. Before decrying this an abomination of brainless excess, however, critics might like to consider that the Phantom saloon we tested two years ago was some 41kg heavier still on our scales.

INTERIOR

★★★★½

That the Cullinan doesn't seem like such a high-rise vehicle when you first get in may well be because the car automatically lowers its body by 40mm as you unlock it and open the door. Its 'coach' doors are heavy to pull but have intelligent hinge stays that will hold each firmly in place once you've arrested its progress. They then motor-close automatically either as the passenger holds down an adjacent button inside or after the chauffeur presses the exterior keyless unlocking button.

The interior doesn't quite match a Phantom for spaciousness in both rows, and some testers reported just the merest sense of restricted access to the rear of the cabin as they boarded through those 'suicide' rear doors – but neither is a problem about which it would even occur to you to complain. The cabin can be laid out like that of a large, fairly conventional five-seat SUV, with split-folding back seats and an expanding boot (the Lounge seating option) or in more Rolls-Royce-typical four-seat fashion, with individual motorised rear chairs, a fixed centre console and a fixed rear bulkhead partition. The latter keeps luggage separate from the cabin, boosting on-board refinement and preventing any unnecessary disturbance to the cabin as the driver opens the boot (which is considered a selling point in colder markets). Our test car had the five-seat Lounge layout, with motorised folding seatbacks that stowed completely flat and a motorised boot floor that could be raised to produce a handily flat loading surface.

The driving position has an SUV-typical vantage point and is wrapped in Rolls-Royce-grade opulence and sense of occasion very cleverly. The Phantom itself is, after all, a large and fairly high-riding limousine with quite a raised roof and hip point, and so by transposing all of that upwards by nine inches or so, the Cullinan delivers a more commanding view of the world outside but doesn't need to redefine a familiar and beautifully enveloping interior theme.

The cabin's Black Badge alterations include an attractive if predictable mirror-shine carbonfibre veneer that the firm calls 'Technical Carbon', and red-tipped needles for the car's hybrid analogue and digital instruments. They're the subtle touches you'd hope for in a gently warmed Rolls-Royce, but perhaps not the ones you'd expect of a Cullinan. For those who'd prefer something brasher still, meanwhile, leather upholstery in Forge Yellow is available – although you can't help thinking that actually ordering →

● Suspension and 4x4 controls are simple: an 'up' and a 'down' for ride height; and an 'off road' button to ready the 4WD, traction control and hill descent electronics.

● Black Badge cars have this motif, taken from Malcolm Campbell's Bluebird hydroplane and originally used to denote a competition class unlimited on engine power.

● Technical Carbon veneer was developed especially for the car and is produced via a six-layer lacquering, curing and polishing process that takes 21 days per car.

Multimedia system ★★★½☆

The Cullinan must have missed out on getting the very latest ID7 infotainment technology of Rolls-Royce parent BMW by a pretty narrow margin. The system the Cullinan uses instead remains very good, though – and it's debatable whether Rolls-Royce would have integrated some of the newer set-up's functionality even if it could have. Still, there's a chance that at least some of the younger, more tech-literate owners that Rolls-Royce is reaching out to with this car may feel just a little short-changed.

The system it has fitted is smartly presented and easy to use, whether you're sticking with the iDrive-style rotary controller or going touchscreen (as no Rolls-Royce before has permitted). The voice control set-up likes you to input addresses in a slightly unintuitive order (town, street, house number) but it works well in other respects.

Wireless smartphone charging is standard, as is wireless phone mirroring. Our test car had a Rolls-Royce Bespoke audio system fitted, whose amplification level wasn't specified, but it had excellent power and clarity.

> It begins to develop accelerative force around it like an A380 on take-off

← it probably ought to come with a custodial sentence.

PERFORMANCE

★★★★½

Judging exactly how much extra performance a 560-horsepower Rolls-Royce may need in order to begin justifying a 20% price premium cannot be an easy task. Add too little urgency and the owner – who may not even be driving, don't forget – simply won't appreciate where his or her money has gone. Add too much, though, and you risk piercing the balloon of indulgently smooth luxury, which, more than any other dynamic quality, remains Rolls-Royce's true calling card.

Understandably perhaps, Rolls-Royce has chosen to err on the side of caution here – even with this, the biggest and brashest Black Badge to date. The Cullinan's engine is the usual audible picture of gentility and reserve in normal running order. It takes on the faintest sporting growl if you thumb the 'low' button on the car's column-mounted gear selector, although it's still one you'd struggle to hear over a lightly modified hot hatch that happened to be idling nearby.

The car's initial responses are likewise idiosyncratically gentle, as if 'a hurry' would be the single most graceless state in which any Rolls-Royce might ever find itself. Flatten the accelerator from rest and the Cullinan's first few metres are all smoothness and composure. A couple of strides in, however, the car begins to gather accelerative force around it like an A380 on take-off.

It nips under 5.0sec to 60mph from rest and, more impressive still, gets from 30mph to 70mph in just 4.2sec, besting its bigger sibling, the Phantom, as performance tested by this magazine in 2018, in both respects. The latest Bentayga Speed would most likely be quicker from a standard start, and a Urus quicker still; but it's the Cullinan's combination of huge and seamless speed, served up with a total lack of savagery, that really distinguishes it.

Responsiveness in roll-on acceleration remains progressive. Because there's no means of selecting a gear manually here, the only way to ready the car for an imminent sprint is to use that 'low' transmission mode; and while doing so certainly makes the car quicker to react to your right foot, it does feel like a slightly Machiavellian abuse of the Cullinan's good nature.

It doesn't create much extra in the way of sporting engagement, either – something that you wouldn't expect of any Rolls-Royce, let alone a Rolls-Royce SUV, but which the extra-special positioning of this one somehow makes seem like a missing jigsaw piece nonetheless.

HANDLING AND STABILITY

★★★★☆

For the most part, the Cullinan Black Badge handles exactly as you'd expect a big Rolls-Royce might. Except for right at the margin of its dynamic potential, it is not a car that will surprise you with keenness, or whose outright stability or body control urges you on to great speeds. It is, almost to the base of its contact patches, a pretty simple, relaxing conveyance, and its dynamic mission is clearly not to equal the versatility, capability or grip of some of its rivals, but instead to do 'luxury' well – with just the merest hint of sporting seasoning sprinkled thereon.

The car wears its size and heft on its sleeve, with steering that isn't heavy but is quite gentle and slow around the centre. That allows you to guide and position the car with the finely metered precision that has marked out Rolls-Royce's cars for decades and makes it change direction quite softly – up to a point.

The suspension permits some body roll to build as you turn in, only to check it at an entirely comfortable angle as you've dialled in about a quarter turn of steering, just as you're

● Graceful, unruffled and comfortable progress remains a higher priority than sheer sporting prowess but the Black Badge will deliver an extra hit of agility if you demand it

Assisted driving notes ★★★☆☆

Rolls-Royce is maintaining an evidently circumspect attitude towards the adoption of the latest driver assistance technology. The Cullinan will automatically detect and adopt variable motorway speed limits and it does have a tunable autonomous emergency braking system (which can only be deactivated in Off-road mode).

The car's lane-keeping capacities are limited to a lane change assist system that will warn you clearly if you're about to veer into the path of an overtaking car or more gently if you're departing your lane. It does not have a conventional 'active' lane-keeping assist system, though.

The Cullinan's intelligent cruise control will allow undertaking. The standard-fit night vision system, meanwhile, is a little gimmicky, but because it does seem to make for effective pedestrian detection after dark, it's worth its place.

EMERGENCY BRAKING

- Does it seem less than averagely prone to false activation? ✓
- Can its sensitivity be turned up and down according to driver preference? ✓
- Can it be deactivated? ✓
- Does it have effective pedestrian/cyclist detection? ✓

LANE KEEPING ASSIST

- Is the system tuned to keep the driver engaged at all times? **na**
- Does it allow you to drive around a pothole/obstacle within your lane easily and without deactivation? **na**

INTELLIGENT CRUISE CONTROL

- Can it consistently recognise and automatically adopt motorway gantry-signed variable speed limits? ✓
- Does it prevent undertaking? ✗
- Does it have effective audible or visual alerts, or steering intervention, to prevent changing lanes into the path of an overtaking car? ✓

sizing up the apex of the tight bend you happen to be negotiating.

It's at this point, however, that the chassis of the Cullinan Black Badge delivers its final, carefully hidden year-end bonus: an extra dose of cornering purchase and agility, coming perhaps as the four-wheel steering system finally empties its pockets, or possibly thanks to an acceleration in directness from the front axle. Whatever the reason, this Rolls-Royce chooses to keep its dynamism under a bushel until it's absolutely required, rather than waving it under your nose with every twitch of the wheel or vertical fidget of the ride; and you can't help quite liking that about it.

The car's vertical body control is fairly soft and permissive, but there's an impressive ultimate sense of composure to it as you add speed or topographical complexity, or both, to its workload – just as the dampers seem to say "this far and no further". And that's rather likeable, too.

COMFORT AND ISOLATION ★★★★☆

Were you to list the buzzwords for any Rolls-Royce model from any era, 'isolation' would be either at or very near the top. And the Cullinan duly delivers. Recording 61dB at 70mph, the cockpit doesn't so much summon church-like calm as that of an anechoic chamber buried six feet beneath the granite crypt floor. By comparison, the Bentley Bentayga manages only 65dB, which is still commendably quiet but, given this is a logarithmic scale, sits in an entirely lesser division to the Rolls.

The efforts of the mammoth V12 are particularly well suppressed, and with no tachometer to give the game away, the Cullinan can generate a convincing EV-like glide under light loads. The perched driving position is also more lounge-like than for any comparable car, but while the absence of sporting presence is totally appropriate, greater lateral support and suppleness from the flat chairs would improve matters. Bentley still has the upper hand in this regard.

However, ride quality is one area in which we would expect the Cullinan to do conspicuously better. For an SUV, on the move it replicates the long-wave grace of lower-riding Rolls-Royce cars well, but the air suspension can labour over smaller corrugations in the road and isn't immune to bump-thump at town speeds. This is a typical complaint with such cars, and evidently not even Rolls has solved the engineering challenge posed by huge, heavy wheels and suspension designed to offer robustness, substantial ground clearance and generous travel.

BUYING AND OWNING ★★★★☆

The magnificent Phantom can justify its stratospheric asking price in relation to rivals such as the Bentley Mulsanne and Mercedes-Maybach S650 but, as we've now seen, the case for the Cullinan may be slightly less convincing. Starting at £264,000 but rising steeply with options, it's £100,000 more than a W12-engined Bentayga. Equally, that's also around £100,000 less than for a Phantom.

In any case, cost is unlikely to trouble most 'patrons', and in practical terms the Cullinan is on a par with some of its ultra-luxury rivals. Even with a touring economy of only 23.6mpg, a 90-litre fuel tank gives the car a range of nearly 500 miles – enough to drive from London to Frankfurt non-stop. Real-world testing does, however, indicate that urbanite owners should expect closer to 11.0mpg, but this would still do for 40 trips from Chelsea to Mayfair and back before needing to visit a forecourt.

Meanwhile, servicing requirements, aside from an annual oil change for the V12, are dictated by the car's sensors and recommended on an ad hoc basis. →

ACCELERATION

Rolls-Royce Cullinan Black Badge (6deg C, slippery patches)

Standing quarter mile 13.3sec at 109.9mph, standing km na, 30-70mph 4.2sec, 30-70mph in fourth na

Bentley Bentayga W12 (2016, 12deg C, dry)

Standing quarter mile 13.4sec at 107.7mph, standing km 24.2sec at 138.1mph, 30-70mph 4.4sec, 30-70mph in fourth 5.8sec

BRAKING 60-0mph: 3.07sec

Rolls-Royce Cullinan Black Badge (6deg C, slippery patches)

Bentley Bentayga W12 (2016, 12deg C, dry)

Data log

ROLLS-ROYCE CULLINAN BLACK BADGE

On-the-road price	£306,935
Price as tested	£356,975
Value after 3yrs/36k miles	na
Contract hire pcm	na
Cost per mile	na
Insurance	na

EQUIPMENT CHECKLIST

22in forged alloy wheels	■
Night Vision and Vision Assist camera with wildlife and pedestrian warning	■
Active cruise control	■
Collision warning, cross-traffic warning, lane departure and lane change warning	■
Height-adjustable air suspension	■
Four-wheel steering	■
10.0in touchscreen infotainment	■
Head-up display	■
'RR' monogram headrests	■
Spirit of Ecstasy, grille, exhausts and body trim in dark chrome plate	■
Automatic door close	**undisc**
Shooting star headlining	**undisc**
Rolls-Royce Bespoke audio system	**undisc**
Rear privacy glass	**undisc**
Rear theatre entertainment configuration	**undisc**
Front ventilated and massage seats	**undisc**
Lounge rear seating configuration	**undisc**
Boot preparation	**undisc**

Options in **bold** fitted to test car
■ = Standard
na = not available
undisc = undisclosed

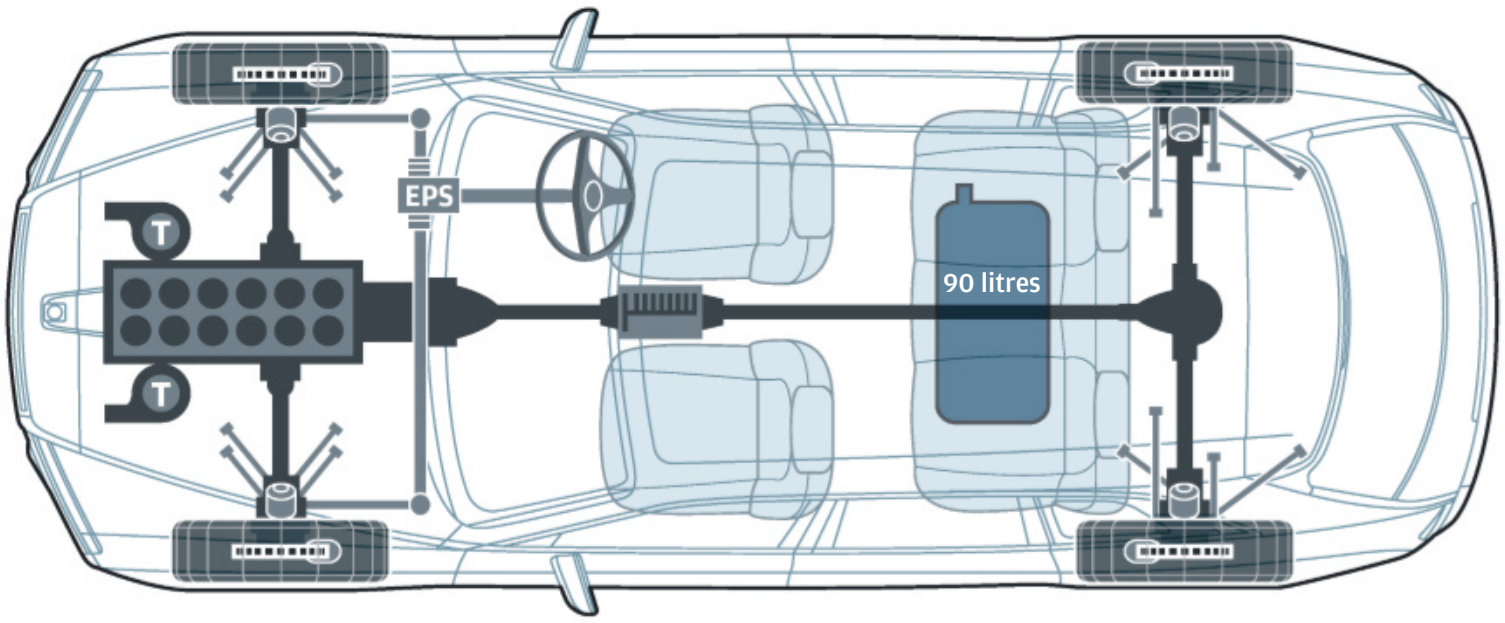

TECHNICAL LAYOUT

Cullinan adopts Goodwood's all-aluminium 'Architecture of Luxury' model platform, which puts a turbo V12 engine longways in the nose and an eight-speed automatic gearbox immediately downstream. It's the first Rolls-Royce in history with two driven axles, using adapted double-wishbone and multi-link suspension arrangements front and rear. Test car's weight was distributed 51:49 front to rear.

ENGINE

Installation	Front, longitudinal, four-wheel drive
Type	V12, 6749cc, twin-turbocharged, petrol
Made of	Aluminium block and head
Bore/stroke	89.0mm/90.4mm
Compression ratio	10:1
Valve gear	4 per cyl
Power	591bhp at 5250-5750rpm
Torque	664lb ft at 1700-4000rpm
Redline	6000rpm
Power to weight	222bhp per tonne
Torque to weight	250lb ft per tonne
Specific output	88bhp per litre

POWER & TORQUE

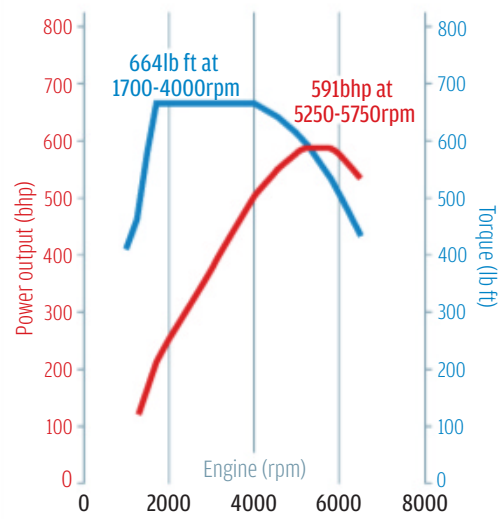

ECONOMY

TEST MPG	**Track**	8.9mpg
	Touring	23.6mpg
	Average	18.6mpg
CLAIMED	**Low**	9.8-10.1mpg
	Mid	16.5-17.0mpg
	High	20.5-21.4mpg
	Extra high	19.5-20.2mpg
	Combined	17.0-17.3mpg
	Tank size	90 litres
	Test range	368 miles

EMISSIONS & TAX

CO_2 emissions	343g/km (NEDC eq)
Tax at 20/40% pcm	na

CHASSIS & BODY

Construction	Aluminium spaceframe
Weight/as tested	2660kg/2739kg
Drag coefficient	0.36
Wheels	9.0Jx22in (f), 9.5Jx22in (r)
Tyres	255/45 R22 Y XL (f), 285/40 R22 Y XL (r), Continental ContiSportContact 5
Spare	Run-flats

TRANSMISSION

Type 8-spd automatic
1st 5.00/6.6 **2nd** 3.20/10.2 **3rd** 2.14/15.3
4th 1.72/19.0 **5th** 1.31/25.0 **6th** 1.00/32.8
7th 0.82/39.9 **8th** 0.64/51.2
Final drive ratio 2.813:1

SUSPENSION

Front Double wishbones, air springs, active anti-roll bars
Rear Multi-link, air springs, active anti-roll bar

BRAKES

Front 395mm ventilated discs
Rear 398mm ventilated discs
Anti-lock Standard, with EBD, brake assist
Handbrake type Electronic, via switch
Handbrake location Right of centre console

STEERING

Type	Electromechanical, rack and pinion
Turns lock to lock	2.6
Turning circle	13.2m

SAFETY

ABS, DSC, EBD, BA, collision warning, cross-traffic warning, lane-change warning
Euro NCAP crash rating Not tested

CABIN NOISE

Idle 38dB **Max rpm in 4th gear** 71dB
30mph 54dB **50mph** 58dB **70mph** 61dB

ACCELERATION

MPH	TIME (sec)
0-30	2.1
0-40	3.0
0-50	3.9
0-60	4.9
0-70	6.3
0-80	7.6
0-90	9.2
0-100	11.3
0-110	13.4
0-120	16.3
0-130	-
0-140	-
0-150	-
0-160	-

ACCELERATION IN KICKDOWN

mph	TIME (sec)
20-40	1.7
30-50	1.8
40-60	1.9
50-70	2.4
60-80	2.7
70-90	2.9
80-100	3.6
90-110	4.2
100-120	5.0
120-140	-
140-160	-
160-180	-
180-200	-

MAX SPEEDS IN GEAR

1	**39mph** 6000rpm
2	**61mph** 6000rpm
3	**92mph** 6000rpm
4	**114mph** 6000rpm
5	**150mph** 6000rpm
6	**155mph** 4733rpm
7	**155mph** 3881rpm
8	**155mph*** 3029rpm

* claimed

RPM in 8th at 70/80mph = 1368/1563

THE SMALL PRINT Power-to-weight and torque-to-weight figures are calculated using manufacturer's claimed kerb weight. © 2020, Haymarket Media Group Ltd. Test results may not be reproduced without editor's written permission. For information on the Cullinan Black Badge, contact Rolls-Royce Motor Cars Ltd, The Drive, Westhampnett, Chichester, West Sussex, PO18 0SH (01243 525700, rolls-roycemotorcars.com). Cost-per-mile figures calculated over three years/36,000 miles, including depreciation and maintenance but not insurance; Lex Autolease (0800 389 3690). Insurance quote covers 35-year-old professional male with clean licence and full no-claims bonus living in Swindon; quote from Liverpool Victoria (0800 066 5161, lv.com). Contract hire figure based on a three-year lease/36,000-mile contract including maintenance; Wessex Fleet Solutions (01722 322888).

AUTOCAR ROAD TEST No 5461

Read all of our road tests autocar.co.uk

VERDICT ★★★★☆

Far more likeable to drive than look at, for those who've a use for it

For a great many, the Rolls-Royce Cullinan Black Badge will be at least one convention-defying subversion too far. However, it does add versatility and usability to the Rolls-Royce model portfolio – and both in transformative doses. It manages this without departing so far from the demure and genteel dynamic mould that remains so powerful a selling point for these incredible luxury cars that 95% of owners might notice the difference. As such, it succeeds where it really matters.

If, for a moment, we think like a Rolls-Royce owner, with a Phantom at the Hertfordshire estate and a Wraith in Monte Carlo, we might easily imagine having a Cullinan at the desert ranch or ski lodge – where you might freely use it and where it would be a delight to use.

At the request of its customers, Rolls-Royce has delivered a world-class luxury SUV here – and the Black Badge version will appeal to nobody more powerfully than those who believe money grants them the ultimate freedom: to care so little what the world thinks of you that you can even advertise it in the most extraordinary of terms.

Testers' notes

RICHARD LANE
Push-button door closures are a modern RR hallmark but the motors lack the power to get the job done if you're parked on even a slight incline. They get close, then give up and allow the doors to swing back limply outwards. Disappointing.

SIMON DAVIS
Not sure I'm a fan of the Black Badge's raised brake bite point and shorter pedal travel. They work fine when moving at pace but can affect how smoothly you bring the car to a halt at town speeds. It doesn't feel quite as dignified as it should.

Spec advice

- Deep-pile lambswool floor mats from the Phantom look and feel fantastic but don't expect them to take kindly to muddy shoes. We'd probably leave them out.
- Ordering the car without a middle seat in the back row will seriously harm the residuals, and as you can have reclining outer seats, there's no reason not to have five seats.

Jobs for the facelift

- Work to improve secondary ride quality – particularly around town.
- Update the infotainment system.
- Wouldn't hurt if it was a bit easier on the eyes...

ROAD TEST RIVALS

Verdicts on every new car, p82

1 BENTLEY BENTAYGA SPEED
Has versatility and breadth of ability the Rolls can't touch. Plush and aloof one moment, fast and composed the next.
★★★★½

2 ROLLS-ROYCE CULLINAN BLACK BADGE
Drive has most of the grace and refinement the appearance lacks. Enormous luxury appeal.
★★★★☆

3 LAMBORGHINI URUS
Much more the super-sports car on stilts than the high-rise luxury conveyance; but capable of the genuinely hair-raising.
★★★★☆

4 RANGE ROVER SVAUTOBIOGRAPHY LWB
Once singularly lustrous shine of the big Rangie has dulled with age and competition. A fine thing.
★★★½☆

5 MASERATI LEVANTE TROFEO
Top-of-the-range Levante has a Ferrari turbo V8 for power and plenty of fairly exotic driver appeal. Substance a bit lacking.
★★★☆☆

	1	2	3	4	5
Price	£182,200	£306,935	£167,000	£179,675	£124,900
Power, torque	626bhp, 664lb ft	591bhp, 664lb ft	641bhp, 627lb ft	557bhp, 516lb ft	574bhp, 568lb ft
0-62mph, top speed	3.9sec, 190mph	5.0sec, 155mph	3.6sec, 190mph	5.5sec, 140mph	4.1sec, 186mph
CO_2, economy	335g/km, 19.2mpg	343g/km, 45.6mpg	335g/km, 12.7mpg	298g/km, 18.9mpg	319g/km, 13.2-13.7mpg

AUTOCAR SUBSCRIBER EXTRA

DRIVING YOUR LOVE OF CARS FOR 125 YEARS

We are proud of our past but are not slowing down – even at 125. Join Autocar Subscriber Extra today and we'll power your passion for everything with four wheels.

WHY NOT TRY OUR OTHER GREAT TITLES? | View all of our offers on **themagazineshop.com**

TERMS AND CONDITIONS This is a UK-only offer; for overseas offers, please visit themagazineshop.com or call +44 (0) 1604 251 461. All savings are based on the UK cover price and are correct as of January 2020. Please allow 35 days for delivery of your gift and first issue. The gift will be sent under separate cover from the magazine and won't be dispatched until your first payment has cleared. Should we run out of gifts, you will be offered an alternative gift; there is no cash alternative. Direct Debit rates are valid for one year, after which they are subject to change; should prices change, we will inform you in writing. Should you wish to cancel your subscription, it will be cancelled on expiry of the current term, which will not be refundable, other than in exceptional circumstances. Details of the Direct Debit Guarantee are available upon request. Savings are based on the standard UK cover price of £3.80. Offer ends 3 March 2020.

SUBSCRIBE TODAY

DISCOUNTS
Exclusive discounts from carefully selected partners

WEEKLY NEWSLETTERS
Exclusive content in weekly newsletters

COMPETITIONS
Subscriber-only competitions

SUBSCRIBER EVENTS
Access to exclusive subscriber-only events

13 ISSUES FOR JUST £24.70

Visit **autocar.co.uk/subscribe** or call **03448 488 816** and quote promotional code **'AC220MP'**

A MATTER OF FORM

The insane new Mercedes-AMG A45 S comes in at £50k. Does it make sense to spend that much money on a hot hatchback when you could instead buy a lightly used Nissan GT-R supercar? **Richard Lane** investigates

PHOTOGRAPHY OLGUN KORDAL

How expensive can the humble hot hatchback become before the concept loses all meaning for drivers of typical means? Renault recently let its ambition run rampant with a version of the Mégane RS that, in its most pulverisingly hardcore, carbonfibre-wheeled form, costs more than £72,000. It's an awe-inspiring asking price, and too much, because if most of us wanted an impractical machine that prioritised involvement for that sort of money, we'd have the new Porsche 718 Cayman GT4 or a lightly used Lotus Exige Sport 410. And it wouldn't require much head-scratching to come to that realisation.

But now Mercedes-AMG is having a go. Its effort is called the A45 S, and all £50,570 of it (£56,570 for the option-laden Plus driven here) is being chased across the sort of patchily damp, unevenly cambered B-roads we all know and love. Fast? Freakishly so – genuinely supercar-baiting. Expensive? Evidently, but had you bought a Delta S4 Stradale from Lancia in 1985, it would have cost you £55,000, translating to £167,000 today, so along with the RS Trophy-R, we're hardly talking unprecedented sums. And unlike in those cars, you do at least get a second-row bench behind the deep buckets in the AMG.

Very much like the Lancia, there's a whiff of homologation about this new Mercedes, even though – with no A-Class motorsport activity since the previous generation competed in the BTCC – it's nothing of the sort. Compared with the £38,000 A35, designed to go up against the Volkswagen Golf R et al, the A45 S is a different animal: broader wings, wider tracks, brackets welded in to stiffen the sleek, snouty body and a truly world-class powertrain with recording-breaking specific output. This car even has canards, ridiculously, and four 82mm tail-pipes to visually balance out the huge – and optional – rear wing.

The Nissan GT-R also has a wing, not least because it can hit 196mph. Road test editor Matt Saunders has brought one along because →

The coupé is longer, wider and lower than its hatchback rival

Twin tail-lights have featured since 1972; bulletproof V6 can be lifted to crazy outputs

BUGATTI THE UK'S CHIRON, FERRARI PISTA, FERRARI 812, FERRARI 488, FERRARI TESTAROSSA, PORSCHE MACAN, PORSCHE CAYENNE, PORSCHE 911, PORSCHE GT3, PORSCHE PANAMERA, RANGE ROVER VELAR, LAND ROVER DISCOVERY, LAND ROVER NO. 1 DEFENDER, RANGE ROVER, RANGE ROVER SPORT, RANGE ROVER EVOQUE, MASERATI GRANTURISMO, LAMBORGHINI MIURA, LAMBORGHINI HURACAN, LAMBORGHINI AVENTADOR, FUNDER FOR LAMBORGHINI COUNTACH, LAMBORGHINI URUS, LOTUS EVORA, LOTUS EXIGE, ASTON MARTIN VANTAGE, ASTON MARTIN DBS, ASTON MARTIN VANQUISH, ASTON MARTIN DB4 TESLA MODEL X, TESLA MODEL 3, PRESTIGE, SPORTS TESLA MODEL S, BENTLEY CONTINENTAL GT, BENTLEY BENTAYGA, ROLLS-ROYCE PHANTOM, ROLLS-ROYCE DAWN, ROLLS-ROYCE WRAITH, MCLAREN 720S, AND CLASSIC CARS MCLAREN 650S, MCLAREN 570S, MERCEDES-BENZ C-CLASS, MERCEDES-BENZ AMG GT, MERCEDES-BENZ GLS, MERCEDES-BENZ C63, MERCEDES-BENZ PAGODA, JAGUAR F-PACE, JAGUAR F-TYPE, JAGUAR E-TYPE, BMW M5, BMW M4, BMW M3, BMW X5, AUDI R8, AUDI Q7, AUDI S3, AUDI RS4, AUDI A5.

This is a small selection of the thousands of cars we fund every year. Get in touch for tailored funding and personal support for your next car purchase.

Talk to Oracle today on **0330 838 7461**.
oraclefinance.co.uk

Trustpilot **4.9** out of 5

Please note: we are a credit broker and not a lender. This means we act independently through a wide range of lenders to offer a broad and competitive choice of products and solutions. Oracle Asset Finance is not affiliated to any motor manufacturer. Please contact us for an individual quotation on any prestige or sports car. Finance and terms are subject to status. UK residents only. Oracle Asset Finance Limited is authorised and regulated by the Financial Conduct Authority for the sale of consumer credit. Calls will be charged at your standard network rate.

Neither engine sings, but this is a walkover in terms of exhaust note. The GT-R's V6 sounds boosty and howls at higher revs, and it does so naturally. The A45 S still makes plenty of noise, but it's just that: noise, not music, and it's artificially enhanced.

"The GT-R's primeval road presence is undimmed after all these years"

The GT-R delivers little more than 20mpg

A45's interior is a wonder of modernity

it poses an enviable conundrum for the would-be A45 S buyer.

When the R35-generation GT-R arrived in 2007, Nissan perpetrated a memorable strategy balls-up by underpricing it to an almost comical degree. It cost £56,000, undercutting rivals in performance and pedigree by light years, and the bargain price solidified Godzilla's reputation as one of the great giant-slayers.

Nissan remedied its mistake, and the GT-R has since become steadily more expensive; the new track-day Nismo version costs an astonishing £175,000. But today you can buy a lightly used, post-facelift example for the same money as a new A45 S. And that leads us to today's burning question: when it comes to these giant-slayers, could you honestly bring yourself to buy the hatchback over the supercar? Would you be a fool to even consider it?

Many people will consider it, on account of the GT-R's age. First built at Nissan's plant in Tochigi Prefecture, where even the police force enjoy the local speciality, fundamentally the current GT-R is now long in the tooth, and nowhere is that more evident than its interior. Equally, its primeval road presence is undimmed after all these years, and it's difficult to think of many cars that need less of an introduction in terms of performance.

In MY2017 guise, the GT-R's twin-turbocharged 3.8-litre V6 makes an unstressed 562bhp and 470lb ft, put to the road through a BorgWarner twin-clutch six-speed transaxle and Nissan's ATTESA E-TS driveline. With two lengthy propshafts, the system is generously rear-biased but can go half-and-half for the torque split as necessary, and the GT-R remains among the quickest ways to string several counties together short of using aviation fuel.

These newer cars supposedly put more of the 'GT' in 'GT-R', too, with softer damping and better acoustic insulation, but on noisy Dunlop tyres this example still feels reactive and raw, if not to the extent that owners of the latest Mercedes-AMG C63 S would be up in arms. Litchfield, the world-famous specialist where this car is for sale, nevertheless tends to swap the Dunlops for Michelin's excellent Pilot Sport 4S rubber.

Finished in Sun Yellow, the little A45 S is nuclear fusion on wheels: a concentrated dose of massive energy. It's up against the GT-R here, but a compact footprint and the fact the closed-deck, hand-assembled, AMG-grade engine makes fully 416bhp from merely two litres and then delivers it to all four corners makes it more of a successor to the old Mitsubishi Lancer Evolution.

There's no full-time four-wheel drive or manual gearbox, though. Instead you get an eight-speed dual-clutch auto and a set of clutches in the rear axle that can siphon all the available torque (meaning up to half what the engine is making at any given moment) to either side. The engine has also been swivelled so the exhaust ports and twin-scroll turbo now face your kneecaps and the intake looks forwards. This set-up also shortens various air channels for better response. An electronic →

THE BEST GT-R FOR YOUR BUDGET

2013 GT-R £42,995
This is a second-phase GT-R, so it benefits from better gearbox mapping and more power: 542bhp. With GT-R culture being what it is, standard earlier cars are rare, but this seems a good example with relatively few miles. It looks epic in pearl white.

2019 GT-R PRESTIGE £68,000
Considering the GT-R is now priced from £83,955, this 1960-mile example looks inexpensive. Alongside the visual tweaks, third-phase cars made 563bhp and received stiffer bodies to go with softer damping settings. There's also improved NVH and interior upgrades.

2018 GT-R TRACK EDITION £89,995
The Track Edition shadows the Nismo, sharing its seam-welded shell, wider track and hollow anti-roll bars. This one has been fettled by Litchfield to make 630bhp. Arguably representing an R35 sweet spot, it's still good value.

tickle of the mass-produced M260 engine in the lesser A35 it is not.

From what Saunders says after following in its wake, it's clear that the AMG has the measure of the GT-R in terms of point-to-point pace on the road – which is remarkable. Whether that would still be the case on a bone-dry day, when the coupé's larger contact patches and more balanced layout could make the difference, seems academic. You'd need to be travelling at speeds not so much unprintable as incomprehensible to really show much difference.

More surprising still is that the Mercedes' primary weapon isn't its mighty but strangely workmanlike engine. We expected it to rock up with an absolute head-banger of a powerplant paired with a chassis so uncompromising it would be almost impossible to live with. Not so. Its blend of body control and pliancy at speed is an exhibition, and likewise the relatively plush low-speed ride is unrecognisable from the old A45.

Where the GT-R's chunky body can find itself a half-step behind the road surface, the A45 S has an almost telepathic awareness of what's going to happen next, to the extent that you may get a vague sense of futility. Any corner, seemingly at any speed: you can feel the clever driveline triggering differentials and flexing torque even as the nose whips in. And while the stubby tail will swing, what the car really wants to do is stay perfectly neutral and fling itself forth, with the rear axle mucking in to an enjoyably detectable degree. Short of crassly overriding physics, it doesn't do understeer.

With 200kg less to carry, despite the two extra doors, the AMG has the GT-R licked for agility. And while its speed-sensitive steering is less consistent and can become twitchy on choppy surfaces, it possesses life and heft – traits carried over from AMG's fine-steering bigger-hitters.

In comparison, the GT-R needs some winding up, and in more ways than one. You need to acclimatise, because with all that mechanical clonking, gentle turbo whistle in the background and delicate but acute accelerator response, the car feels shot through with an authenticity that can be mildly intimidating even at sedate speeds. Also, the cabin is on the tight side and the Naca ducts in the bonnet bulge up into your field of vision, although as rivals have grown, the GT-R no longer seems to spread across its lane so thuggishly.

Only when you really begin to explore the performance – the car's potential, and how much of it you might exploit between here and there – do you realise that the GT-R, even in its twilight years, can still draw you deeper into the driving experience than so many others, including this phenomenally effective AMG. Fail to read the road and it will hop and skip at times, and despite the point-and-squirt reputation, the combination of its long nose and rear torque bias means it's only with a sense of excitement and trepidation that you begin to brake later and chase the

Any used GT-R is going to hold its value better than a new AMG; the A45 S is forecast to lose half of its worth after three years and 36,000 miles. Mind you, the Nissan will need more servicing and will manage barely 30mpg on the motorway, compared with more than 40mpg for the Mercedes.

THE WORLD OF USED GT-Rs

Never mind the £63,000 GT-R driven here: a quick skim through the online classifieds shows it's now possible to get hold of an early GT-R for less than half that. Assuming you can find one with a traceable and reasonably caring history, the arguments for such an outrageous, sub-£30,000 purchase are straightforward: 478bhp, 434lb ft, amusingly brutal kerbside presence and true driver appeal for VW Golf GTI money.

At the other end of the spectrum, post-2017 GT-R Nismos, with their GT3-spec upgraded turbos, enormous carbon-ceramic brakes and perforated bodywork, still go for more than £100,000.

What's important to remember is that Nissan has continuously refined and improved the GT-R, often without fanfare between major facelifts. Not only that, but also the original cars need servicing every six months or 6000 miles; Nissan moved to annual servicing for 2012, so you're better off with the most recent car possible.

Whichever GT-R you plump for, the robustness of the powertrain is legendary – standard engines will reliably take around 770bhp, while the 'box can handle 630lb ft – and with specialists like Litchfield, there's plenty of support. Lastly, because Nissan keeps pushing up its prices, residual values tend to stay strong.

GT-R's absurd array of dials and gauges remains charming

> The A45 S has an almost telepathic awareness of what's going to happen next

	Nissan GT-R	Mercedes-AMG A45 S
RATING	Impossible to look past at this price, offering a multifaceted and rawer driving experience ★★★★½	Feels special and versatile enough to justify the high asking price. A proper AMG ★★★★½
Price	£63,000 (£79,995 new in 2017)	£50,570
Engine	V6, 3799cc, twin-turbocharged, petrol	4 cyls in line, 1991cc, turbocharged, petrol
Power	562bhp at 6800rpm	416bhp at 6750rpm
Torque	470lb ft at 3600-5800rpm	369lb ft at 5000-5250rpm
Gearbox	6-spd dual-clutch automatic	8-spd dual-clutch automatic
Kerb weight	1752kg	1560kg
0-62mph	3.3sec (est)	3.9sec
Top speed	196mph	168mph (governed)
Economy	20.2mpg (WLTP)	32.8mpg (WLTP)
CO_2, tax band	300g/km (NEDC eq), 37%	192g/km (WLTP), 37%

throttle earlier. Then you start to find its groove. In this weather, it will slide freely, sometimes unexpectedly, and to get the most out of any GT-R you need to show respect and finesse, which you don't always with the A45 S. This makes it an addictive car.

How likely is it that any committed GT-R shopper could be tempted to buy an A45 S instead? Bluntly, there's next to no chance. As much as the performance continues to represent superb value for money, the Nissan's heritage and aura are what give it almost inimitable appeal at this price, and its rawness is worn as a badge of honour. Inevitably, the hot hatch's slick usability also undermines its sense of occasion, if only a little.

Those of a more open-minded disposition are strongly advised to drive the AMG. Plenty will scoff at the price, but you need to forget about traditional hot hatches and coldly consider what this one can do. The performance is simply extraordinary, and the fact it comes from an engine of only conventional displacement means the handling isn't made nose-heavy by additional cylinders. This M139 unit is also smooth and linear (although not by any means immune to turbo lag), which is some achievement, given the stress it needs to withstand. The new gearbox is a touch slurpy in comparison with the best dual-clutchers, but it's easily good enough, and the car also does surprisingly well in other core areas: driving position, pedal weighting and, let's not forget, passenger space.

So please excuse the cop-out, but there really is no loser on this occasion – because both cars are exceptional in many ways, and because both manage it despite pariah status. The GT-R has to share its badge with all manner of soulless metal and the A45 S will always carry the baggage of being a hatchback, but they're giant-slayers both. The GT-R's spirit, the more unfiltered nature of its talent and the eventfulness of even a short drive ultimately give it the edge, but few A45 S owners will regret their choice. This latest AMG – a car more identifiably AMG than hot hatch – is clearly worth the money. A

Rear wing comes with the £6000 Plus options pack

Even the pipes bear AMG branding; from the front, nobody has to know it's a Nissan...

Lose the £5000 Performance Pack and £3500 by way of the government grant and the price falls to £41,400. An entry-level front-drive model will eventually drop the price further.

AND THEN THERE WAS 2

After Polestar's limited-run, debutant 1 comes, logically, the 2 – its mass-market, make or break EV. **Richard Lane** drives it

Hällered proving ground sits an hour's drive east of Gothenburg and seems an exemplary place to experience a Polestar 2 for the very first time. Sets of quiet, remote test tracks wind among the forest and chime with the car's environmental brief. Unlike the plug-in hybrid Polestar 1, the 2 is entirely electric, with a WLTP range of 311 miles and nothing less than the Tesla Model 3 in its sights. This place also has space enough to properly exploit the performance on offer. Which is lucky because, with a dedicated electric motor for each axle, the 2 makes 487lb ft – more even than the Nissan GT-R on p42 – and does so almost instantly.

But Hällered also feels an odd place to become better acquainted with the 2, which at £49,900 will cut the cost of entry to the Polestar owners club by almost two-thirds and will exist as a big-volume model next to the hand-built, 1500-off £139,000 Polestar 1 grand tourer. These smaller cars will be assembled in the Luqiao facility of Polestar parent company Geely in China and the battery modules are from LG Chem in South Korea. Siemens in Germany builds the motors and the brand recently opened a 120-strong R&D facility in Coventry. It's an amazingly global product whose muscularly attractive design will ensure that it draws eyeballs and graces the streets in fashionable places around the world. Yet here we are, standing in the Swedish bush.

But this is where the magic happens. "The first thing the driver gets from the chassis is how the steering feels," says Joakim Rydholm, the lead chassis engineer and someone not only with a clear mission sense but also softly voiced but nevertheless Italianate levels of passion. "Then the rest of the suspension should work in harmony with the steering," he says, revealing that the chassis is set up for slight oversteer. He says the manually adjustable Ohlins dampers alone were iterated through 120 different tunes, with removal and hardware changes required each time: "There are no shortcuts: it's hard work

Olle Fast (right) talks powertrain with Lane

> "With a dedicated motor for each axle, the Polestar 2 makes 487lb ft"

WHAT'S IT LIKE TO DRIVE?

No point beating around the bush: the Polestar 2 is good to drive. It may never set your synapses on fire but the natural steering response is well matched to what the suspension is doing, and on Hällered's quick, flowing handling course, the Ohlins dampers – hydraulically textured in their movements – only ever need one bite of the cherry to get the body under control.

Given the powertrain layout, it is no surprise that the car's balance is good and one can't fail to notice how high the limits of grip are compared with, say, an XC40. It can be teased into neatly rotating on the brakes, but snow and ice are required to get the car expressing itself under power.

On the more challenging rough-road tracks (there are surfaces resembling LA freeways and Perthshire B-roads), the ride is on the firm side but remains genuinely compliant. Gut feel says this car ought to cope well with UK surfaces, although the softer set-up of non-Performance-Pack versions might be best for daily driving.

It's well balanced and grippy, with good body control

Given that Polestar's owner Volvo is in the midst of an almighty product offensive, these are not exactly slow days at Hällered and so our time here is short. Olle Fast (powertrain expert, naturally) joins the discussion and reveals more. We know the 2 sits on the same CMA platform as the XC40, but it also features a unique front subframe for crash protection (combustion engines being more absorbent than electric motors), has modifications at the rear and supports a battery whose shape leaves good rear footwell space, which is rare in an electric car.

In fact, barring the small boot and poor rearward visibility, the 2's cabin is superbly conceived. Where the Model 3 goes for an expansive, minimalist ambience, this is more classically enveloping. The window line is high and the glasshouse vaguely pillbox, and the standard panoramic roof is a game-changer because, without it, the high 'transmission' tunnel, abrupt 11.0in display and blade-shaped dashboard might have made the place feel too confined. As it is, the cockpit feels safe, secure and involving, and even in this early-stage verification prototype, the fabric and wood trims hit high notes for perceived quality. Soft but supportive seats – a modern Volvo speciality – complete the surprisingly lavish picture.

Back with the not-so-oily bits, Fast explains that the torque split is variable between 60:40 and 40:60 and Rydholm adds that steering angle is used to inform the split and help the car rotate. Drive smoothly and it looks for grip; get punchy and it will begin to favour the rear. Fast also says that for more power, they'd need a better-flowing battery rather than stronger motors, although so rapid is the pace of development that improvements are being made "more or less on a daily basis". For now, it's 402bhp whether or not you go for the Performance Pack, which brings 20in wheels with Continental SportContact 6 tyres, the Ohlins dampers and gold-calipered Brembo brakes.

For an electric mass-market family car, the Performance Pack is overkill. And, in truth, so is the surging performance of the 2. But there's appeal in the way this machine concurrently feels both highly rational and slightly illogical, and at a time when so many automotive pleasures come with guilt attached, that's exciting. That the people behind this electric car are what we might still describe as 'petrolheads' is even more so.

behind the steering wheel to get a good car. The human is sensitive and you cannot calculate that."

All of which should be music to our ears because, as always, it comes down to priorities. Polestar will not operate dealerships but chic 'spaces'; the cars can be ordered online only; it will make a splash among the general public, with cutting-edge looks and zero-emission powertrains; and it is a subsidiary of a marque that recently announced an intention to limit its cars to 112mph and, bluntly, has never given us a world-class driver's car. It would have been so very easy for driver appeal to descend so far down the 2 to-do list as to become irrelevant, but that has not at all been the case (see separate story, above).

With its broad rear-light signature and deadpan face, the Polestar 2 looks bigger on the road than it really is. Its footprint sits comfortably with that of both the BMW 3 Series and Tesla Model 3, although it's taller than both. The hip point feels somewhere between the S60's and XC40's.

Polestar 2 is an eye-catcher with plenty of road presence

POLESTAR 2

Price	£49,900
Motor	Two, AC synchronous, permanent magnet
Power	402bhp (total output)
Torque	487lb ft (total output)
Gearbox	1-spd (dual)
Kerb weight	2020kg (approx)
Top speed	140mph (est)
0-62mph	4.7sec
Range	311 miles (WLTP)
Battery	78kWh, lithium ion

> At its heart, handling is not measured by a car's ability to powerslide until its tyres melt

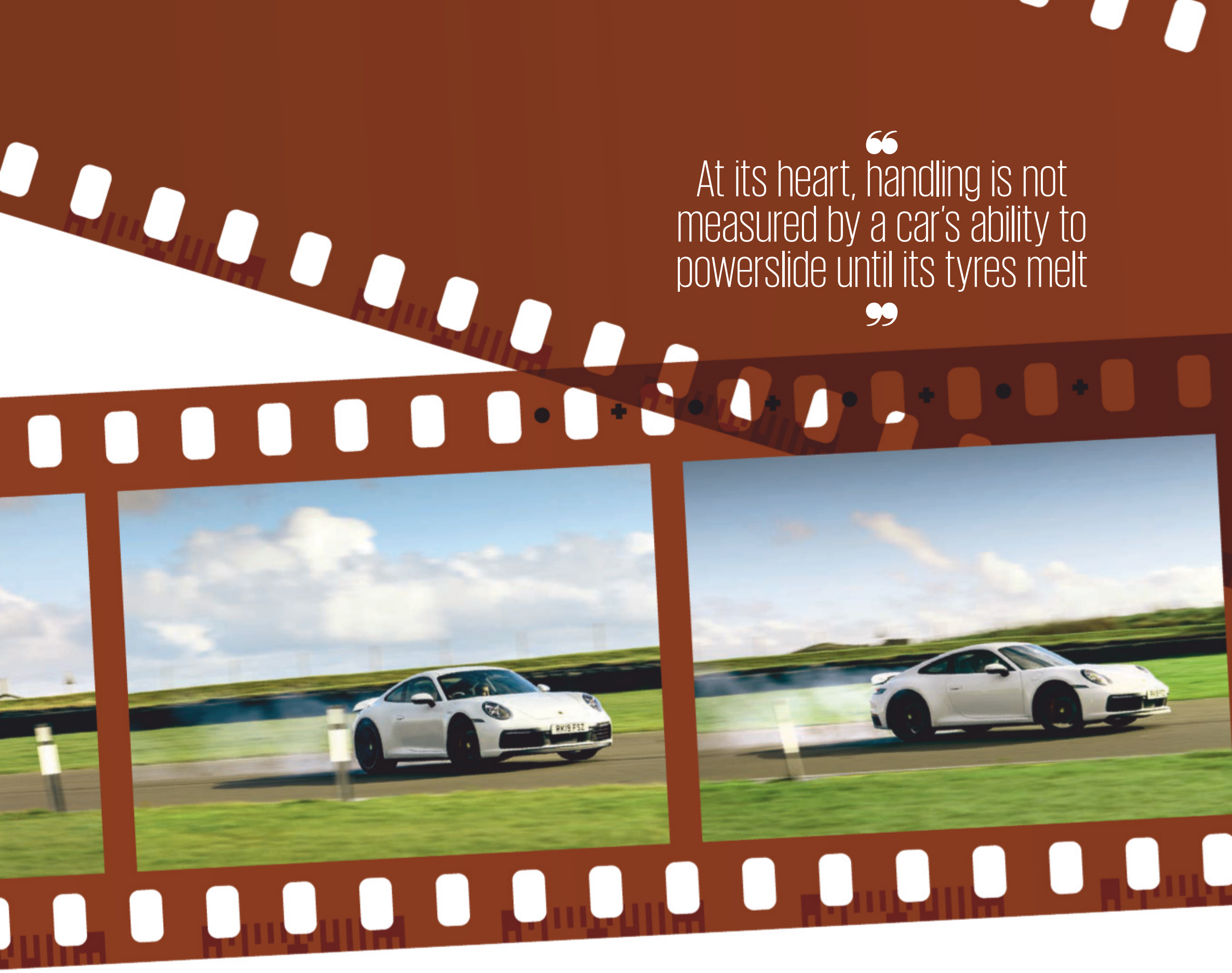

CAN YOU HANDLE IT?

What defines bad, good or even truly great handling? Veteran road tester **Andrew Frankel** gets to the bottom of what makes the perfect driver's car

PHOTOGRAPHY OLGUN KORDAL

The white Porsche 911 angles into the turn. It's a quick corner, top end of third gear, but instead of gently coaxing it into the apex, managing its mass and keeping the loaded tyres within the circle of adhesion where longitudinal and lateral forces haggle eternally for grip, the driver sharply lifts and then flattens the throttle. Instantly the car is sideways. It wants to spin, but the driver catches the fast-moving tail with the steering. But no attempt at recovery is made. Instead the foot stays down, the tail stays out, now towing a ball of super-heated, atomised rubber particles. Yet it still finds the apex and still finds the exit before snapping straight and howling away up the straight beyond. A few minutes later its driver brakes the car to a halt in the pit lane, lowers the window and says to anyone listening: "That is what I call handling."

And I suspect neither you nor I would have much truck with that. But just because it's true doesn't mean that's the whole truth or, as I shall seek to show, even very much of it. What follows is my attempt to describe what handling actually is – and for the most part it has very little to do with the terrible twins of oversteer and understeer – and what qualities need to be engineered into a car in order to provide it.

At its heart, handling is not measured by a car's ability to powerslide until its tyres melt but by something far more simple and precious: the ability of a car to execute the instructions of its driver.

If that sounds like a statement of the obvious, then you are one up on those chassis engineers the world over whose efforts fail in this simplest regard. To see what I mean,

GREAT-HANDLING CARS

CITROEN 2CV6
Genius interactive independent suspension and low centre of gravity courtesy of flat formation engine made for implausibly good if visually dramatic handling.

FERRARI DINO 246GT
Not the first mid-engined car but the first to keep proper control of its back end when it ran out of grip, helped by superb steering and not much adhesion.

PANTHER SOLO
Mired by myriad other issues, the first car to marry four-wheel drive with a mid-engine layout offered miraculous balance and superb steering – while it lasted.

CATERHAM SEVEN
For more than 60 years, Caterhams and their Lotus 7 predecessors have been proving that when it comes to handling, there's no substitute for keeping the weight off.

PORSCHE 911
Even the early ones, which gained a bad rep because people had not yet learned how to drive them. With a slow in, fast out approach, a 911 has stunning handling.

take your car to a quiet roundabout, apply what you judge to be the requisite steering lock to negotiate it and don't move your hands. Normal road speed is fine. Does it go where you thought you'd pointed it? If so, can you continue to lap said constant-radius roundabout without moving the steering wheel? If the answer to either question is 'no' then your car is not going where you want it to. It is not executing your instructions.

You'd be amazed by how many cars cannot perform this apparently simplest of tasks. When I first started doing this job more than 30 years ago, I was tutored in precisely this phenomenon by none other than former Formula 1 driver, Jim Clark team-mate and Autocar columnist John Miles; I was staggered by how imprecise and inaccurate most normal road cars were. Over the years that followed cars did get a lot better as chassis structures gained rigidity, suspension became more sophisticated and tyre sidewalls flexed less, but in this modern era of electric steering systems, where traditional 'feel' has been largely eradicated, combined with variable-ratio racks that give varying outputs to the same input according not only to steering angle but also and often to road speed, knowing exactly where you're pointing a tonne-and-a-bit of fast-moving metal is in fact becoming harder once again.

But there are elements of handling more basic even than that, and just as often still got wrong. Take the humble steering wheel. Just think, for a moment, what it has to do. It must interact with other components mentioned above (structure, suspension, wheels and tyre) and, if a car is to handle predictably, be as linear in its actions as possible. But →

← it must also be correctly geared: too slow and you'll be whirling your arms uncomfortably and, should the car slide, it'll take longer to catch. But too fast and the car will feel horribly nervous, even in a straight line, and when it slides you will need greater accuracy in order to catch it. It must also be correctly weighted for reasons I don't think I need to explain, and both on- and off-centre.

Is that it? Not even close. The wheel must be positioned such that even quite unconventionally proportioned drivers can place it where it is comfortable, where it does not obscure the instruments and in a way that allows the car to be driven by the wrists and elbows and not from the shoulders with straight arms. It must also be angled correctly. Yes, it is true that Stirling Moss used straight arms to drive circles around the opposition and that old Minis have steering wheels mounted at London bus angles, but even the best rules have their exceptions.

What about the size of the wheel? Smaller is more sporting, surely? Perhaps, but it also makes controlling the car more difficult, which is why Porsche and McLaren use quite large wheels. Then there's the rim itself, its thickness, its squidgyness (if there is even such a word), the material with which it is covered... So a steering wheel is not just a wheel: it is the primary interface between driver and machine, and if any of these elements are wrong it hurts the handling of the car to which it is attached.

We can boil things down further still. Forget the way a car steers, its grip or on-limit balance and simply ask yourself this: can you see out of the bloody thing? One of the legacies left over from Gordon Murray's McLaren F1 is that all McLarens made today have glasshouses like goldfish bowls. And when you're in a car that wide, low and fast, just having the vision to place it accurately on the road is not just reassuring and relaxing, in the most real sense, but it also makes for a better-handling car. Last year I drove a Lamborghini Aventador SVJ straight after a McLaren 720S and I found the Lambo immeasurably harder and more intimidating to drive – not because it was faster, because it wasn't, but because by comparison you peep out at the world through a letter box.

There are other crucial details. What is the pedal placement like? If the car is manual, can you heel and toe under both light and heavy braking? How do the brakes feel? If you find yourself thinking about your car's brakes, there's almost certainly something wrong with them. Are the pedals directly in line with the seat? If manual, where's the gearlever? Ideally no more than a splayed hand's width from the steering wheel.

What about those safety systems? How intrusive are they, is there an intermediate Sport setting and does it actually make a difference?

Steering wheel connects man to machine, so they need to be just right

NOT SO GREAT HANDLING CARS

CHEVROLET CORVAIR
A rear engine and primitive swing axle suspension gave such unusual handling that Ralph Nader wrote a book about it. It was called Unsafe At Any Speed.

FERRARI 348
Probably the car with the most evil back end I have encountered. Would slide quite nicely at first, but more than a few degrees of slip and it was gone. And stayed gone.

ROVER 213
A more slavish devotee to headlong nose plough I cannot recall, although perhaps because I'm not old enough to have tested a Morris Marina. Utterly dismal to drive.

FORD SIERRA COSWORTH
Surprised? You'd not be if you'd driven one in the wet on its Dunlop D40s. No car I tested had a greater disparity between dry and wet grip.

FAST AUDI SALOONS AND ESTATES
Some have been better than others, but all have spent too long immersed in 50 Shades of Understeer. A bit more balance would be brilliant.

Handling characteristics should remain broadly unaltered at all speeds

Can you separate out traction and stability control, can you actually switch everything off when the time comes and does it come back on again if, say, it detects a certain degree of slip with full ABS actuation?

A car's handling should also not fundamentally change through speed or load, although it almost always does, even in these days of computer controlled damping. You don't want a car flopping around all over the place the moment you try to corner fast or load your family and luggage, but the amount of body roll, pitch or heave a car can exhibit matters little so long as that movement is properly controlled. On the other hand, a car that is so tied down on its springs that it doesn't move at all is likely to be deflected by lumps, bumps and changes in road surface, which does nothing for the confidence either.

Which, finally, brings us to the limit stuff. To me the amount of raw grip a road car can generate is not terribly interesting. Actually and often it gets in the way, because there's not much point giving a car great limit balance if that limit is so far away that no one is ever going to reach it. Also, the faster you're going, the quicker things tend to happen, which can create problems all of its own. That's why cars such as the Alpine A110 and Toyota GT86 have been as praised for the easy access they provide to their limits as they have for their behaviour once you have arrived there.

So how should a car perform on and over the limit? Of course, different characteristics apply to different configurations – a front-wheel-drive car will never power oversteer in normal conditions – but it doesn't matter whether you're sideways at 100mph or negotiating a tricky multi-storey, the car should always do what you expect.

Which means that, within reasonable boundaries, the speed at which a car slides is nothing like as important as the rate of that slide. To whit, if a car slides quickly but in an entirely linear fashion, it will be far easier to catch, exploit and enjoy than one whose rate of slide changes according to slip angle. A mid-engined car will tend to slide more quickly than a front-engined car but, so long as the rate of slide is managed, this is not problematic. In the 30 years of our Britain's Best Driver's Car contest, mid-engined cars have won more than front- and rear-engined cars combined.

Once a slide is caught (and presuming this is all done on track), the car should then allow the driver to decide whether to recover, maintain or extend said slide. And if the choice is to recover, the steering, tyres and suspension should work together to ensure the chances of over-correction are minimised.

So that's my little snapshot of what matters, at least to me, about the way road cars handle. But I'll end as I started by restating the only rule that really matters: regardless of price, power, size or intended use, if a car behaves as its driver wishes and expects, it is prima facie a good-handling car. If it doesn't, it isn't. Simple as that. A

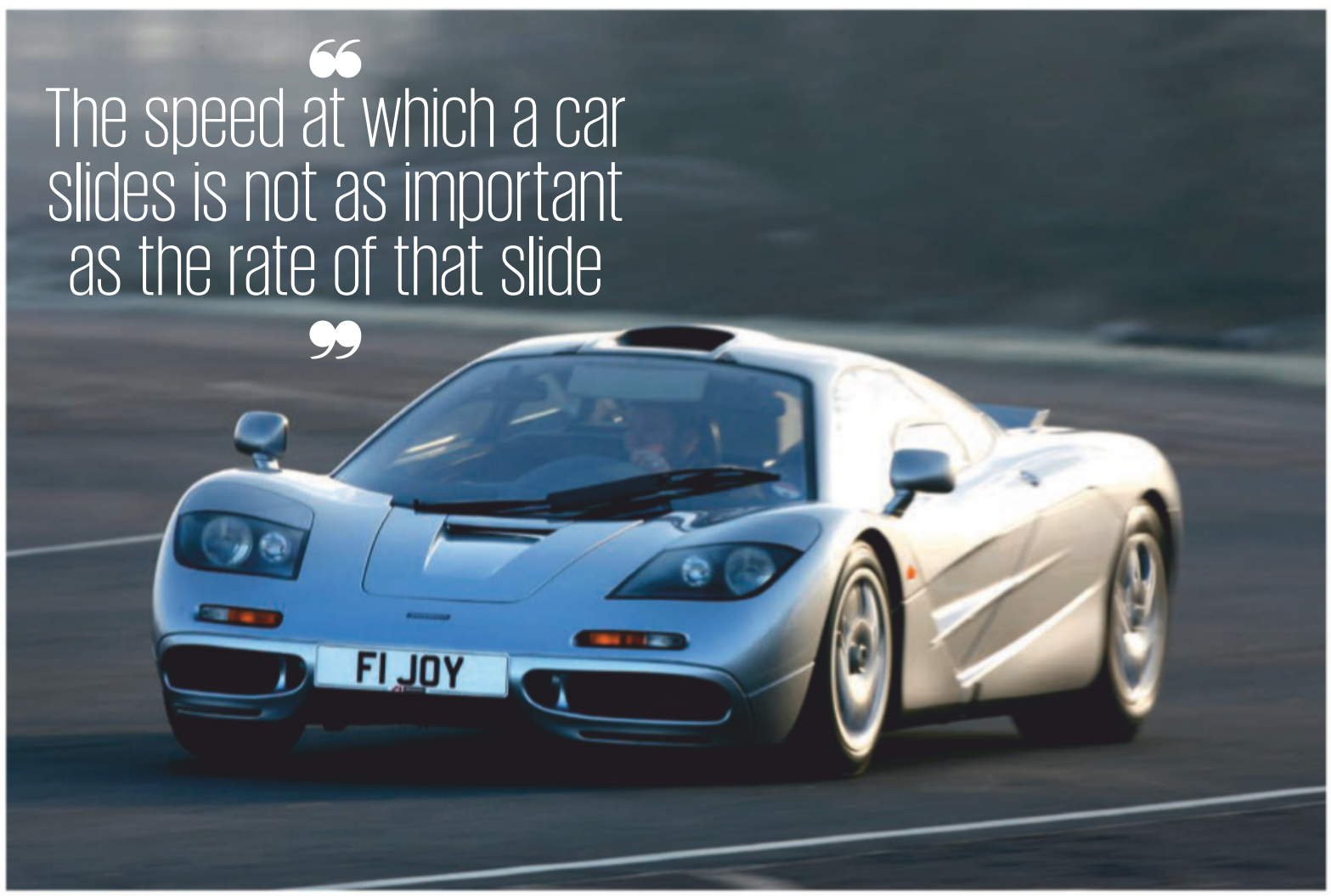

"The speed at which a car slides is not as important as the rate of that slide"

GREAT-HANDLING CARS FOR UNDER £10,000

TOYOTA GT86
From £9000
Stiff at the back and soft at the front and fitted with tyres from a Prius mean not much grip and a bucketload of the most easily controlled oversteer imaginable.

BMW M3 (E46)
From £8000
With a howling straight six at one end and a brilliantly controlled axle at the other, this is one of BMW's best-balanced cars ever, and an utter bargain today.

HONDA INTEGRA TYPE R (DC2)
From £8000
Imported officially from 1997-2001, many say this is the greatest-handling front-wheel-drive car of all. And they're still a bargain.

MAZDA MX-5
From £2500
Any MX-5 will do, so long as it's been looked after, but I prefer the originals and the Mk3 to the Mk2. Condition is all, so be prepared to pay more for the right car.

PEUGEOT 205 GTI
From £4000 (1.6)
Widely regarded as the greatest hot hatch of all time and one of the most entertaining-handling cars you can buy. Many have been modded, so history is critical.

TO BE CONTINUED...

Bentley is in the process of recreating 12 of its legendary 4.5-litre Blowers, the most famous of Crewe's creations. **Steve Cropley** meets the man in charge

Imagine you're one of 12 people who've already laid down £1.5 million-plus to own one of Bentley's magnificent 'continuation series' 1929-style 4.5-litre Blowers.

You've already bought your car, but it's just four months into a two-year gestation and very little of it yet exists. But later this year Bentley Motors' bespoke car operation, Mulliner, will ask you to decide some vital details of your car's specification – and one in particular will entail a bizarre but crucial choice.

Your car is going to be a perfect, reverse-engineered replica of one of the four special racing Blowers built by Sir Henry 'Tim' Birkin, greatest of the pre-war Bentley Boys, chosen to make a racing team from a homologation batch of 50. Bentley has already begun dismantling 'Team Blower' No2 to provide data for this exotic exercise. Pretty soon they'll be assembling hardware.

Then the key question: do you want your car's floorboards to show wear marks from the racing boots of Birkin and Co who drove these cars in period? Or do you want them flat and pristine? Either option is available: so microscopically accurate is the digital measuring process used to create the 12 new customer cars that you can have an authentic, Birkin-heel-sized depression in the wood beside the base of the accelerator, created 90 years ago by exuberant use of the pedal. It's one of a number of tiny choices you'll make as your car's build proceeds, but perhaps the one that puts you closest to history.

Although generally agreed to be the most famous Bentley of all, the 4.5-litre Blower was a model the company's famous founder couldn't abide. WO Bentley's theory was that to make the car go faster you gave it a bigger engine – a theory proved by the fact that the 6.5-litre Speed Six did much better in competition than the Blower. But Birkin, who moved in the same circle as the supercharger designer Amherst Villiers, was keener on the Blower concept (which boosted power from 175bhp to 240bhp). He won the approval of the ailing company's chairman and backer, Woolf Barnato, against WO's opinion. The company built 50 Blowers, plus four for Birkin to modify and race, one of which was the No2 Team car in our pictures, still owned by Bentley Motors.

The Blower never won a race in its heyday and only entered 12 events (hence the continuation batch's size), but Bentley folklore credits the Blower with a key role in a Speed Six's win at Le Mans in 1930. The tale was that Birkin's Blower ran so hard from the start that it "exhausted" Rudolf Caracciola's solitary 7.0-litre Mercedes SSK, the biggest threat to a Bentley victory. Barnato's Speed Six then took the win. But it's likely that Birkin so badly wanted to beat Caracciola that he drove his Blower past the limit of reliability. Bentley benefited in any case, taking its fourth successive Le Mans victory.

The Blower continuation project has been based since September at Envisage, the high-tech car creation consultancy on the outskirts of Coventry. The project's leader is a hugely experienced Mulliner engineer, Glyn Davies, who is using a mystical combination of 2020s digital measuring equipment and his own experienced eye for old cars to decide exactly what the continuation models will be like. Once all digital information has been garnered from No2, operations will return to Mulliner HQ at Crewe, where the 12 new Blowers will be built.

> "I assumed the Blowers were all the same but they're not"

Every part of the original Blower is being digitised

The process has revealed inconsistencies

Davies is a Mulliner 'lifer' who started as a sheet metal apprentice in the 1970s, working in Crewe's experimental department where prototypes were made by hand. He later trained as a mechanical engineer and became a Mulliner project leader, usually deployed on difficult, secret and low-volume projects. Until this gig, his greatest achievement was the successful recreation of a one-off 1939 Bentley Corniche saloon concept destroyed during the war, and the rebuilt car played a large part in Bentley's recent centenary celebrations. Retirement was supposed to follow, but then the Blower project came along.

In theory, producing 12 matching replicas of a pre-war racing car from an authentic original sounds straightforward if you have the skills. Equipped with modern software, you digitise everything using the dismantled original car to decide authentic components. You decide whether existing restoration parts can help (there's already a lively Bentley restoration industry) and then you start building. But it's turning out to be much tougher than that.

"I assumed the Blowers were all the same," he says. "All built on the same standard chassis. But they're not. The Birkin cars were built separately, and they use 5.3mm steel for chassis members, not the standard 4.2mm. And whereas original cars used hot rivets to hold their chassis together, the Birkin cars had bolts. Our lab has confirmed that even the steel grades are different. Luckily we've identified a modern steel with very similar tensile strength and hardness, but it's the kind of problem we didn't expect, and there are others."

Davies and his handful of helpers ("a small team is the beauty of this project") have almost finished scanning and are now well into choosing materials while fussing over tolerances and deciding weird issues such as whether to replicate engine louvre mods made hurriedly in a race paddock 90 years ago. And then there's which supercharger to use. "Every time we see a picture, it looks different," Davies says.

Aside from such decisions there's the job of sourcing non-existent materials, such as No2's dashboard lap counter 'liberated' from a Paris billiard room or the cockpit's array of Victorian light switches. There are sets of imperial bolts and nuts to be found and magnesium alloy bulkheads (each car has two) to be recreated in the correct material. Rexine, the body covering and trim material, isn't the problem it might have been: a far-sighted Bentley enthusiast acquired rights to it when ICI stopped making it years ago.

Suddenly this programme's two years seem no time at all. And you see why it's so vital such a task could only fall to one of the world's proven experts. Whisper this, but even the £1.5 million-plus price tag on these new-age Blower Bentleys looks like a bit of a bargain. A

The devil is in the detail: nut, bolt and grommet recreation requires a part-by-part dismantling of 'No2' to get everything just right

JONATHAN FLEETWOOD

Global overall vehicle sales by country*

China's drop is the biggest recorded for more than 20 years, a seismic reduction of nearly two million new cars. Given the reliance of most Western OEMs on China for sales and profits, a turnaround is much needed to boost balance sheets in 2020.

"China needs a return to consumer confidence and lower household debt to boost sales in 2020," says Felipe Munoz, Jato Dynamics' global analyst.

The US decline was less concerning given overall sales remain near the historic high of above 17 million. "That's a very good number historically," adds Munoz.

Of all the global markets, India suffered the biggest reverse, while the anticipation in 2018 of overtaking Germany subsided. "India suffered a lot from new regulations on safety and emissions, plus taxation, which forced many consumers to postpone or cancel purchases," says Munoz.

Europe's slight recovery was linked to booming December registrations as higher-CO_2 models were sold off ahead of 2020's fleet average 95g/km regulations.

CHINA
25,769,000
-8%

US
17,038,617
-2%

JAPAN
5,119,652
-1%

GERMANY
3,905,597
+5%

INDIA
3,464,125
-12%

FRANCE
2,677,830
+2%

UK
2,676,885
-2%

BRAZIL
2,663,570
+8%

ITALY
2,095,680
+1%

CANADA
1,928,468
-3%

*Includes cars and light commercial vehicles

France vs the UK

Jato's global sales figures for both cars and light vans show France jumping slightly ahead of the UK in the world rankings to sixth position.

Two factors in 2019 explain this: UK new-car sales declined by 56,000 (due to uncertainty related to Brexit and lower diesel sales), while the French market grew by 38,000. French van sales also grew by a bigger margin than the UK's.

The end result was still a bigger car-only market in the UK – with the UK in its customary sixth position globally. But with vans included, the French overtook the UK.

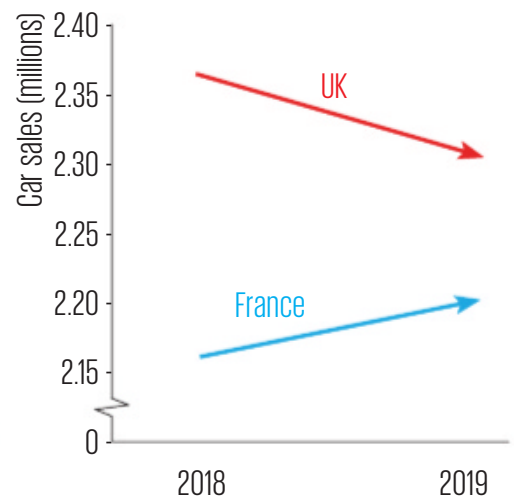

GLOBAL CAR SALES 2019

The numbers are in on global new-car sales for the year just gone. **Julian Rendell** sifts through the data to pick out the major trends from another tough 12 months

Last year was another hugely turbulent one for the global car industry. China, the biggest market for new cars, suffered its second successive yearly drop, while the US, Japan, the UK and India all experienced declines. These markets accounted for nearly 3.2 million fewer new vehicles sold. But there was growth in Germany, France and Brazil.

China's decline looks likely to continue this year, especially with the growing business disruption from the coronavirus taken into account.

Meanwhile, Volkswagen continued to defy the Dieselgate scandal to beat Toyota for the global number one spot, SUVs maintained their grip on global consumers' wallets and GM continued to outsell Ford in the US.

Porsche retained its crown as the sports car champion with the 911 beating all comers. The Ford Mustang was the top coupé, while the Tesla Model 3 bossed the global electric vehicle segment.

■ *All figures supplied by Jato Dynamics from preliminary data for 53 markets (with December estimates for some) that account for 85% of the global total.*

Electric cars: Tesla Model 3 vs low-cost Chinese models

The Tesla Model 3 has a strong lead as the world's best-selling electric car, outselling its nearest rival nearly three to one. Last year it was the best-seller in both the US and EU, and it should make inroads in the Chinese market in 2020 as local production starts in Shanghai.

The second-best-seller is the BAIC BJEV EU, a Volkswagen Golf-sized saloon with a 41kWh battery and a £15,000 post-subsidy price tag.

Nissan's Leaf maintains a solid position as global number three, but didn't lift sales as much as might have been expected for a new model.

GLOBAL TOP 5

TESLA MODEL 3
296,815

BAIC BJEV EU
100,312

NISSAN LEAF
68,822

BYD YUAN
61,900

BAOJUN E100
60,050

What Europe is buying

There was talk last year that mid-size SUVs such as the Nissan Qashqai, Volkswagen Tiguan and Ford Kuga might outsell C-segment hatchbacks and estates for the first time. But they fell just short.

"If they keep posting big annual sales growth, they might do it next year," says Munoz, "but they are still behind if all bodystyles are included."

Superminis continue to be Europeans' favourite bodystyle and they may get a boost in the next few years as city cars (A-segment) come under pressure owing to the incoming 95g/km fleet average regulations.

BODYSTYLES

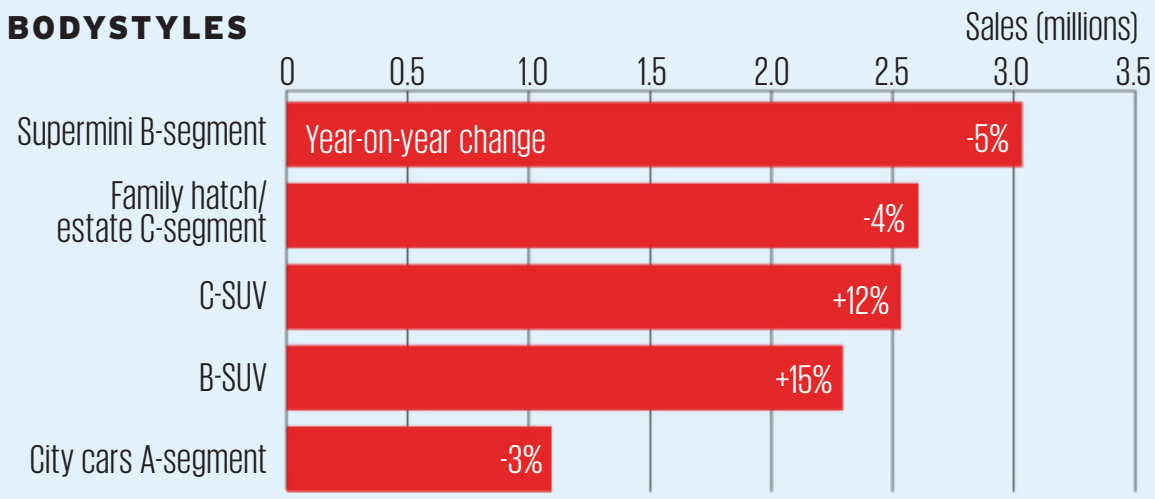

MID-SIZE SUVs

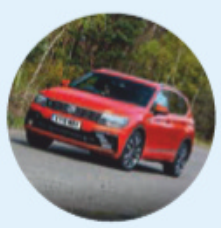

VW TIGUAN
224,008

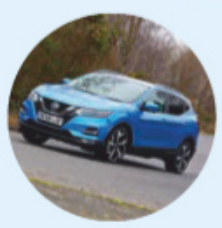

NISSAN QASHQAI
218,560

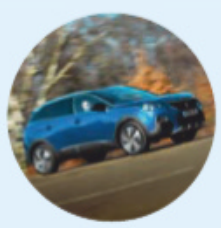

PEUGEOT 3008
195,211

FORD KUGA
162,106

HYUNDAI TUCSON
139,879

Global groups: Which was the biggest of them all?

The Volkswagen Group's launch of multiple new SUV models from all brands helped it remain the top car maker in 2019.

It faced strong competition from Toyota, whose 20-year investment in hybrid technology is paying off: it was the only top-10 car maker to grow sales in 2019. "Toyota improved thanks to the latest-generation Corolla and RAV4 and its continuous hybrid car sales growth," says Munoz.

CAR MAKER SALES

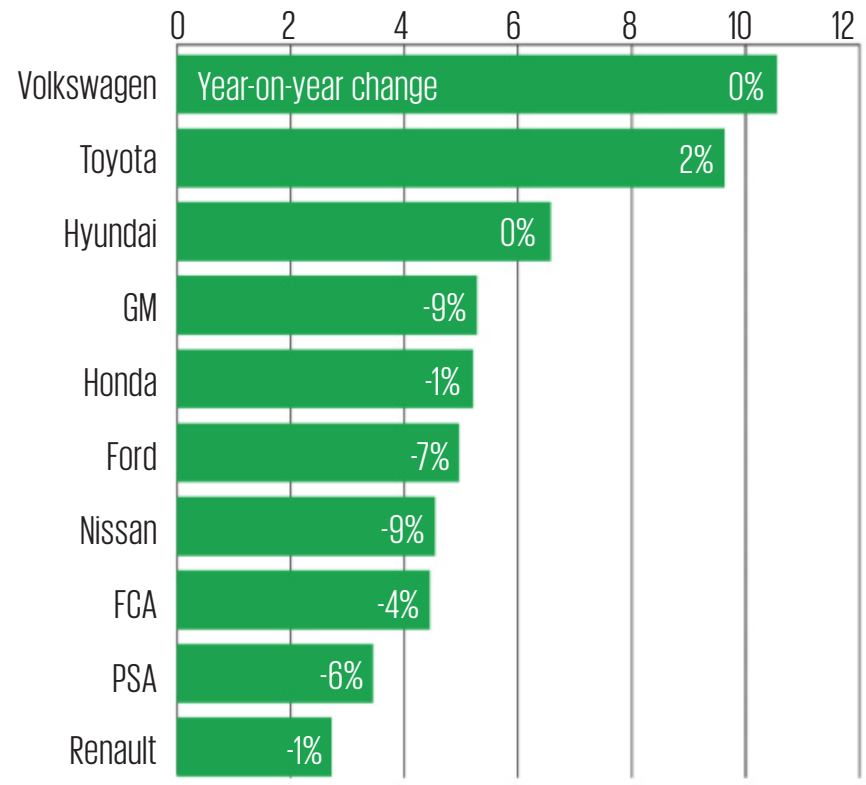

Merc beats BMW and Audi in luxury scrap

In the battle of the luxury nameplates, Mercedes saw off a strong surge from BMW to retain its global crown with 2.32 million sales in 2019.

The top five brands all improved their sales or stayed static, with Lexus and Volvo recording the biggest percentage increases. Last year was good for Lincoln, too.

BMW's strength was its renewed range of SUVs, a new 3 Series and strong sales in China, where Mercedes suffered a decline. "But the negatives are further down the field," says Munoz, "with Infiniti and Jaguar struggling."

Infiniti quit the European market, while Jaguar's core saloon line-up struggled. Tesla might overtake Land Rover in 2020 to become the seventh-biggest global luxury brand, which would be a significant achievement.

LUXURY CAR SALES

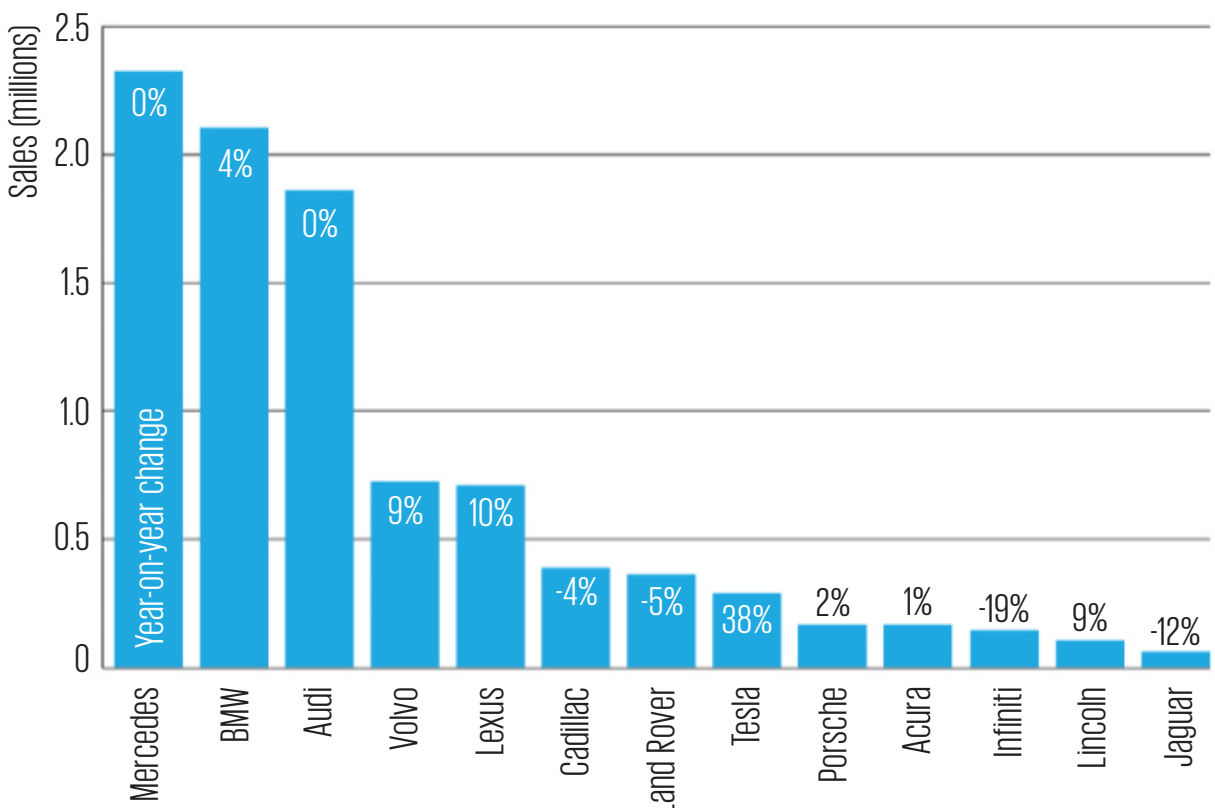

Tesla's big year

Tesla controlled 23% of global electric vehicle sales in 2019. The US accounted for 52% of its total sales volume, followed by Europe and China.

"Looking forward, it will be interesting to see if the Model 3 maintains its strong position when more electric SUVs hit the markets," says Munoz. "The Model 3 is a saloon, which are losing ground to SUVs."

GLOBAL EV SHARE
23%

BEST MARKET
US 52%

BEST-SELLER
Model 3 82%
(of Tesla sales)

Sports cars: 911 remains the favourite

Porsche's evergreen 911, entering its eighth generation, maintained its position as the world's best-selling sports car. While sales did drop slightly, that was largely because of the changeover from 991 to new 992.

Its closest rival was the Chevrolet Corvette, which also stuttered due to a new model.

BMW will be very pleased that its new flagship performance two-door (Gran Coupé four-door sales are excluded from these figures) has made an immediate impact. Due to the arrival of the 8 Series, the Mercedes-AMG GT dropped to fourth place.

PORSCHE 911
32,612
-5%

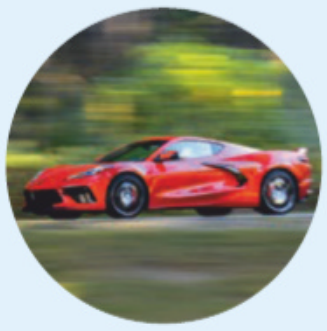

CHEVROLET CORVETTE
21,014
-3%

BMW 8 SERIES
11,365
NA

MERCEDES-AMG GT
4516
-26%

Europe's winners and losers

Tesla was the biggest winner in Europe, outselling other key brands such as Porsche, Jaguar, Alfa Romeo and getting very close to Smart. The reason: the Model 3.

Value brand Dacia also did well, despite a limited model range of two ageing small cars plus the new Duster. The Sandero is among the top sellers in Spain and France, while the Duster became Italy's best-selling SUV.

Nissan was the biggest market-share loser due to an ageing SUV line-up, which lost traction to more modern competitors. The Juke should have been replaced earlier and the Qashqai also faces tough new competition.

Super-luxury: Rolls on a roll

The seven top ultra-luxury brands combined for 35,454 sales – and at transaction prices conservatively averaging £250,000, that's £8.8 billion worth of cars.

Lamborghini and Rolls-Royce benefited from their new SUVs, while two new Aston Martins – the Vantage and DBS Superleggera – helped lift sales above 5000 a year.

Bentley bucked the trend because its saloons fell back. The new Flying Spur might arrest that decline this year.

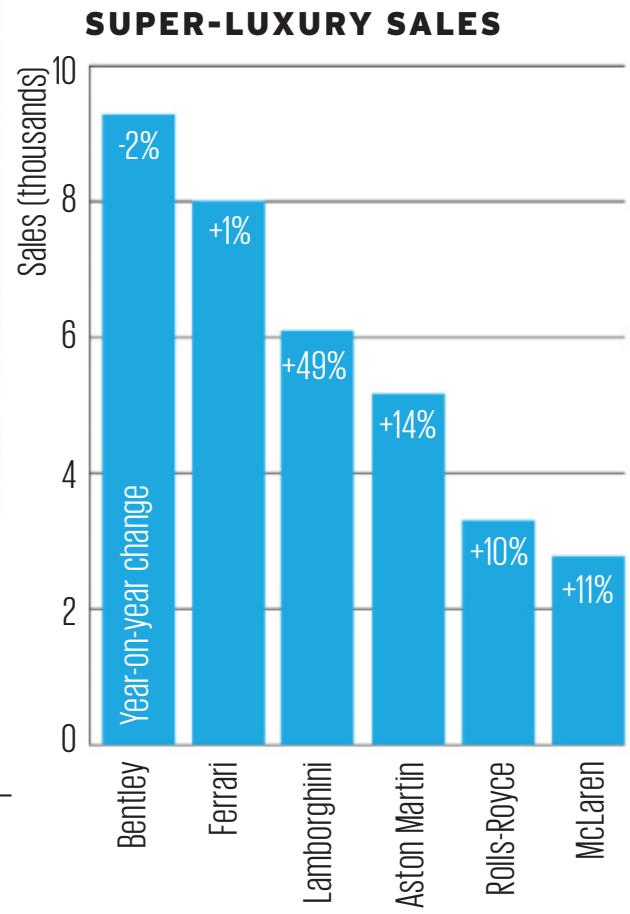

The continued rise of the SUV

An astonishing 28 million SUVs were sold globally last year, although their sales growth dipped to just 1%, compared with 6% in 2018.

"SUVs are like a drug for car makers. They increase sales and profits but at the same time have a negative effect on average emissions," says Munoz.

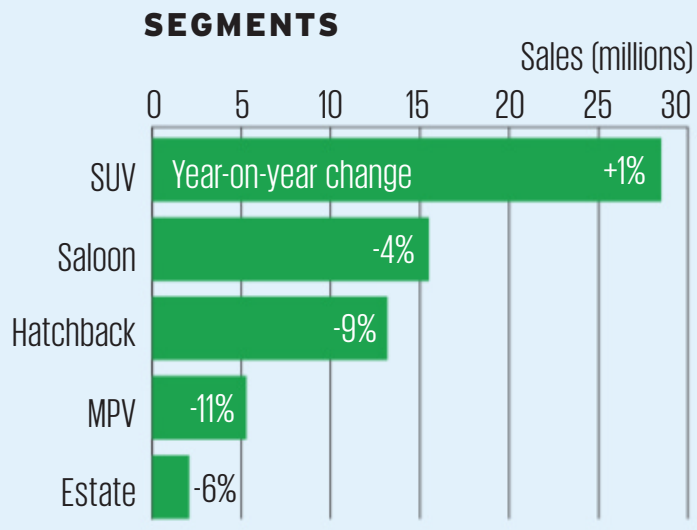

Luxury electric SUVs: I-Pace vs E-tron vs EQC vs Model X

Tesla's Model X is just ahead of the new Audi E-tron but, as the Audi ramps up and the Model X ages, there is a strong chance the E-tron could grab the market lead in 2020.

TESLA MODEL X
32,886
-29%

AUDI E-TRON
27,435
NA

JAGUAR I-PACE
16,236
+135%

MERCEDES-BENZ EQC
1783
NA

Mustang dominant, Boxster slides

Ford's Mustang continues to dominate the performance car market. But the real story in the segment is the decline in Porsche 718 Boxster and Cayman sales, which dropped 20% last year.

No wonder Porsche is bringing back flat-six powerplants, three years after the 718 switched to turbocharged four-cylinder units, to much unhappiness from Porsche aficionados.

Mazda's lovable MX-5 took a slight dip, but continues to sell well for a four-year-old design in a fashion-led market. BMW's new Z4 made a strong market entry and closed the gap on the well-established 718, a result that will please Munich.

Alpine's fabulous A110 hit just under 5000 units – but there are concerns in some quarters that its sales do not reflect the quality of the product or its glowing road test reviews. Munoz notes that two-thirds of A110 sales were in France.

PERFORMANCE CARS

FORD MUSTANG
101,781
-7%

DODGE CHALLENGER
64,186
-9%

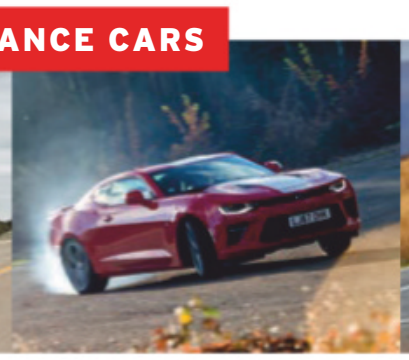

CHEVROLET CAMARO
53,870
-6%

MAZDA MX-5
24,911
-6%

PORSCHE 718
19,336
-19%

BMW Z4
16,352
NA

AUDI TT
14,491
-1%

ALPINE A110
4798
129%

GM stays on top in the US

GM has held the number one spot in the US since the 1920s. Its sales did drop by around 100,000 units, but rivals Ford, Toyota and Fiat Chrysler Automobiles suffered the same small market-average reductions, too.

The most significant move was the 10% drop in sales at Nissan, sufficient to push it down behind Japanese rival Honda.

In the segments, the big winners were full-size SUVs, like the Chevrolet Suburban, which posted a 22% rise, plus compact pick-ups and full-size vans.

Minivans and the three main car segments continue their decline as blue-collar workers and 'soccer moms' switch to SUVs.

US MARKET'S LEADING CAR MAKERS

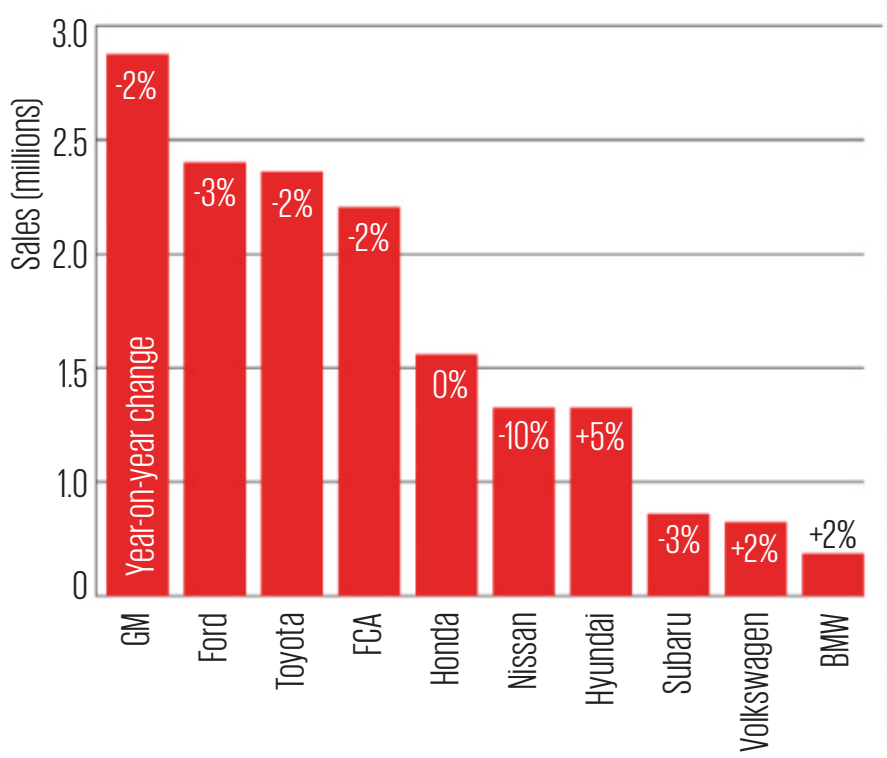

China: Will sales recovery come in 2020?

China's sales fall will take a lot of stopping as consumer confidence and the wind-down of incentives on electric cars take their toll.

"It seems we can expect a long correction unless the EV boom grows enough to offset the drop posted by gasoline cars," says Munoz.

CHINA SEGMENTS

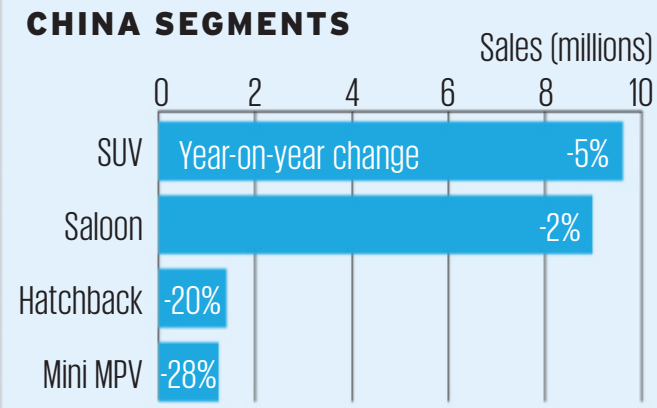

Have an ice trip

James Attwood learns to ski the Porsche way at the Alpine version of Goodwood

The sight of a near-silent electric Formula E car on the move is no longer a novelty, but watching Daniel Abt's Audi E-tron FE06 in action was certainly surreal on this occasion.

For one thing, the single-seater wasn't on a race circuit but a snowbank-lined ice course on a frozen airfield. And it was fitted with studded ice tyres. Oh, and there was a tow rope trailing from its diffuser, at the end of which a skier was hanging on as best he could. And yet that probably wasn't the weirdest sight you could find in the vicinity of that ice track.

Try a 2012 Dakar Rally-winning Mini All4 Racing slithering on ice. Or a Porsche Taycan lapping a circuit at the same time as a historic Porsche 911 with, for reasons still unclear, a surfboard on its roof rack. A lightly modified Bentley Continental GT practising doughnuts. And Hans-Joachim Stuck reunited with the chassis in which he made his grand prix debut, now fitted with six – yes, six – studded tyres.

Welcome to the bonkers world of the GP Ice Race. You might not have heard of it yet but, after just two years, it seems poised to grow into a showcase event on the motorsport calendar: an Alpine Festival of Speed, perhaps.

Like Goodwood, the GP Ice Race is built on a long motorsport tradition. It's centred on the bizarre discipline of skijoring, in which skiers are towed by cars. The first skijoring event in Zell am See, Austria, was held in 1937 on a frozen lake, with skiers towed by bikes. The first Dr Porsche Memorial Skijoring Race took place in 1952, before standard car races were added the next year. It became an annual tradition, although it moved from the lake to the town's airfield in 1969 after several weather-related cancellations. But after the 1974 running was cancelled at late notice, it fell off the calendar.

The revived event features timed runs, competitive races and, brilliantly, skijoring – but it's mostly just an excuse to gather an amazing collection of historic and modern cars for a slippy, slidy motorsport party.

You need metal studs for proper traction on snow and ice

Olympic skier Wörndl chases a Sonderklasse

The GP Ice Race is held at Zell am See airfield in Austria

> "It's mostly just an excuse to gather some amazing cars for a slidy motorsport party"

The GP Ice Race even has its own equivalent of the Duke of Richmond: co-organiser Ferdinand Porsche, great-grandson of *that* Ferdinand Porsche. He says he decided to bring the event "back from obscurity" both to meet the growing demand for historic events and because "motorsport belongs to Zell am See".

While Goodwood is now a slickly organised event on a massive scale, the far smaller GP Ice Race teeters just on the right side of the divide between anarchic fun and chaos (an example: the media centre was located in a bathroom showroom).

With temperatures relatively high, organisers faced a battle to keep the ice course (slightly dull, short and triangular) from becoming cut up and melting into a pool of slush. That resulted in some schedule shuffling, making an already anarchic event downright confusing.

But this shortcoming was amply compensated for by the incredible machines present, whether racing, doing demonstration runs or on static display. Modern machinery included Mitsubishi Lancers, Skoda Fabia R5s and Subaru Imprezas, while the mouthwatering historic field included numerous 911s and Volkswagen Beetles, a smattering of Saab 96s, some gorgeous classic Volvos and a handful of incredible Group B Audi Quattros. As well as giving Stig Blomqvist a run in its Formula E car, Audi reunited him with a Quattro S1 and tasked triple Le Mans winner Benoît Tréluyer with towing 1987 slalom world champion Frank Wörndl behind a 1955 DKW F91 in the skijoring.

Volkswagen gave a glimpse of the future with the Golf eR1, the test mule for the ID R hillclimb racer now repurposed as an electric showcase. But it also ran a pair of distinctive Beetles: a classic 1302 S and Tanner Foust's mighty rallycross machine. Foust said "it was fun to rip up an ice track" but that the coolest moment of the event for him was meeting Stuck.

And that sums up the GP Ice Race. It was far from perfect: the short, tight track offered little room for cars and limited sight lines for the 20,000 or so spectators, and it was hard to know what was going on at times. But it provided truly unique sights. Where else are you going to see Stuck pedal a Formula 1 car fitted with six studded wheels, or a Nascar stock car on ice, or a classic Chevrolet Corvette sliding about a frozen airfield? Surreal? Indeed. And brilliantly so. A

ICY ODDITIES

MARCH-COSWORTH 761/5
Hans-Joachim Stuck used this March chassis for his F1 debut in 1974. It was rebuilt several times in different specs, including the six-wheel 2-4-0 concept, but is now restored as a 1976-spec 761/5. To give Stuck extra grip, four studded tyres were fitted on the rear axle.

OKRASA SPECIAL
British Porsche and Volkswagen dealer David Small began building this car in 1958, using spare parts and aluminium aircraft bodywork. After it sat in a garage for half a century, now-owner Steve Wright finished it over the past decade. It's still yet to hit 500 miles.

PORSCHE TYPE 64
Based on a Volkswagen Type 60 Beetle, the Type 64 was the first car engineered by Ferdinand Porsche, for the 1939 Berlin-Rome race. When the sole surviving original was rebuilt a decade ago, restorer Michael Barbach simultaneously crafted this replica.

WHEN RALLYING MEETS SKIING

Skijoring might just be the best motorsport you've never seen, spectacular and surreal in equal measure. Skiers are towed round a course by a car (or horses, dogs or snowmobiles); the fastest time wins, and there's plenty of technique to it.

Professional skier Dominik Hartmann was towed by friend Dominik Rickauer's Jägermeister-liveried 1977 911. "Physically, it's hard," Hartmann says. "You need lots of muscles in your arm just to hold the rope." The key, he tells us, is ensuring that both skier and driver know how they'll tackle each bend.

While the driver sets the pace, the skier controls the distance between the two by adjusting the slack in the tow rope. "You have to know what they're going to do," adds Hartmann. "To carry speed through the bend, a rally car wants to drift, and the skier has to get to the inside for each corner to ensure a smooth line."

As if regular Formula E races aren't mad enough...

YOUR VIEWS

WRITE TO
autocar@haymarket.com

Duty calls

The inevitable demise of petrol and diesel cars from 2035 or earlier is going to be expensive for us all over many years.

As we approach that deadline and as more electric cars are on the road, the government needs to collect ever-increasing amounts of fuel duty and road tax per person from a smaller number of petrol and diesel car owners. Already the big stick-and-carrot approach is evident, with a huge increase of road tax on older diesel vehicles.

The prospect of a £10 tax per litre of fuel and £5000 annual road tax to persuade us to change our ways could well be the case in years to come. Many perfectly good vehicles will be worthless as running costs go through the roof.

Some new tax will be needed to recoup the loss of fuel duty. We ask where will the lost tax be found?

Terry Sayers
Guisborough, North Yorkshire

Living in the real world

We have moved from the unrealistic NEDC system to 'real-life' WLTP CO_2 testing, and large fines await manufacturers that cannot reduce their fleet average quickly enough.

Unfortunately, this new measurement system is again deeply flawed. A plug-in hybrid is a clever, if heavy, halfway house for many people who want to reduce fossil fuel use, but I guarantee that nobody will achieve typical WLTP figures like 200mpg or 20g/km of CO_2.

These figures arise only because the test route is a limited distance and not what actually occurs in 'real life'. Most people will achieve 0g/km around town and then, say, 150-200g/km on a longer journey, but the EU fines (and UK company car tax) will be based on the official 20g/km.

I urge the authorities to change the measurement of plug-in hybrids to a two-pronged measure of fuel consumption on combustion engine alone and electric-only range. This would give a much better indication of how vehicles will perform in 'real life'. How they're rated for CO_2 emissions is then up for debate.

Meanwhile, the manufacturers can't be blamed for churning out cars that score well in these tests. They have a heavy financial incentive and a tax-led market drive for so doing.

Nick Tiley
Cambridge

Why not make the Jimny a mild hybrid?

LETTER OF THE WEEK

Incentives better than bans

So, the government has brought forward its ban on petrol and diesel cars (News 12 February). I question how this is in any way helpful to the case for EVs. Assuming that the merits of electric cars are well founded, their adoption by the masses should be organic and self-sustaining; build a better product and make it affordable and people will buy it. Then there will be no need for a petrol and diesel ban.

The government would do well to encourage adoption via better tax incentives and, most importantly, a massive drive on infrastructure to actually try to solve the problems that are holding EVs back.

I don't recall the horse being banned to boost the sale of the motor car.

Andrew Fletcher
Via email

WIN
Letter of the week wins this ValetPRO exterior protection and maintenance kit worth £48

ValetPRO
PROFESSIONAL VALETING SUPPLIES

Jimny not cricket

I am a huge fan of Suzuki cars, and just recently they have produced some great models, such as the Vitara and the Ignis.

The new Jimny seemed great, too, until I saw its CO_2 and fuel economy figures. I'm not surprised to learn that Suzuki may be withdrawing it from sale in Europe. Why on earth did they give it such an outdated engine when they produce such great engines as the 1.0-litre in the Vitara and the 1.2-litre mild hybrid in the Ignis, both of which produce low emissions and good fuel economy?

Also, with the demise of the Baleno (a good car but so ugly), there's nothing in the range between the Ignis and the Vitara. Will the collaboration with Toyota produce something to plug this gap, I wonder?

Robert Lambert
Via email

Clear as day

As a user of a modern car that automatically puts its daytime-running lights on, as do most cars these days, I'm always surprised that manufacturers choose to have only the lights on the front lit.

I drive with lights on full time, irrespective of weather etc. But the number of cars that I've come up behind, either in town traffic or on motorways, that from the rear appear to have no lights on but when passed are showing their daytime lights...

Surely this is an easy fix for manufacturers that would be beneficial to safety on our roads.

I assume that drivers don't realise their rear lights aren't on, thinking they are because they're seeing light from their car hitting the road ahead of them.

Chris Ryder-Phillips
Via email

BMW's M8 pitch is all wrong, says Philip

No Bentley rival

Regarding your BMW M8 road test (5 February), it almost doesn't matter what you say or how good it may be – or not. It's not Bentleys and so on that it's chasing, simply because, whether in either coupé or soft-top form, it could only ever be one car: a bloody good Mustang! So, maybe knock almost £100,000 off the price and sell lots versus not many.

Philip Lunn
Tunbridge Wells, Kent

Not very smart

I see the government is rethinking so-called smart motorways. These

have always struck me as dumb and not in the slightest bit smart. If you take away the hard shoulder on very busy stretches of motorways, you're putting people's lives at risk. Hopefully, they will reinstate the inside lane into hard shoulder on the existing smart motorways.
Phil Baker
Chudleigh, Devon

Jazz singer

I'm wondering if any of Autocar's staff have driven the Honda Jazz 1.5 i-VTEC Sport? Following a lengthy road test, I've just purchased one.

It's no slouch (0-60mph in 8.7sec), it handles extremely well without rolling and it's rock-steady on both fast A-road corners and the motorway. It could do with a faster steering rack, but the set-up is a good compromise. It's also a light car – lighter than a Ford Fiesta. Being a past winner of the Midland Speed Championship in a Clio and the Curborough Sprint Championship in a Fiesta, I think I'm qualified to comment on the handling. The engine is a peach, too; economy is 44mpg, according to the display.

When the salesman told me it's the best Jazz ever, I didn't believe him. I do now. This model hasn't taken off as a seller; indeed, it's being withdrawn as I write. So, these cars can be had at a bargain price...
Martin Domleo
Preston

A stiff rebuttal

I found the Your Views pages in the 5 February issue interesting – particularly the comment from Peter Ratcliff. He suggests that to permit cars to undertake would be safe.

No, we're not going to follow that idea from the US, because the undertaking maniacs on our motorways and other roads contribute to the incident toll as much as those who overtake unsafely and those who hog the middle lanes. A ridiculous suggestion, sir!
Geoffrey George Weiner
Brighton

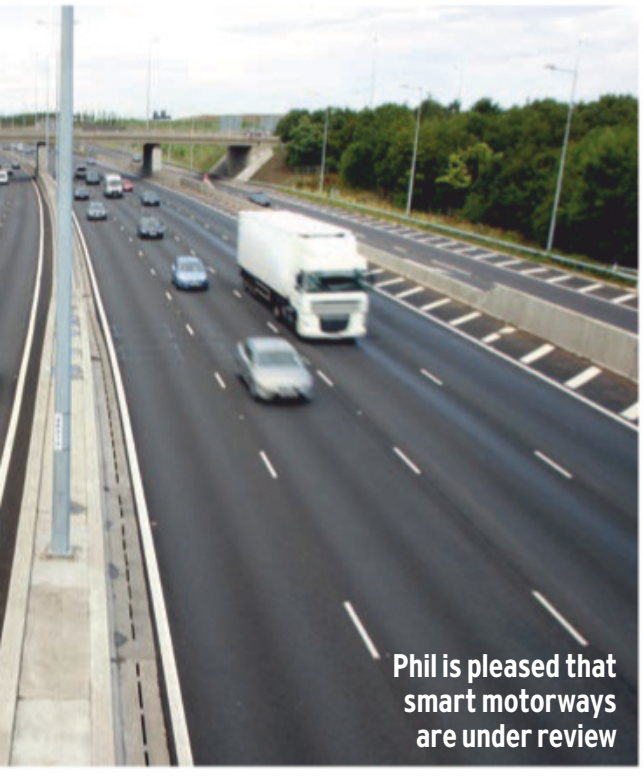
Phil is pleased that smart motorways are under review

GREAT REASONS TO BUY

NEXT WEEK'S ISSUE

ON SALE 26 FEBRUARY

COMPARISON

Mercedes-AMG GT 4-Door Coupé vs Polestar 1 vs Porsche Taycan
We assess three very different takes on the high-performance grand tourer – and find out whether petrol, hybrid or electric power is best

FEATURE

Renaultsport Méganes reunited
Tracing the lineage of one of the greatest-ever hot hatches

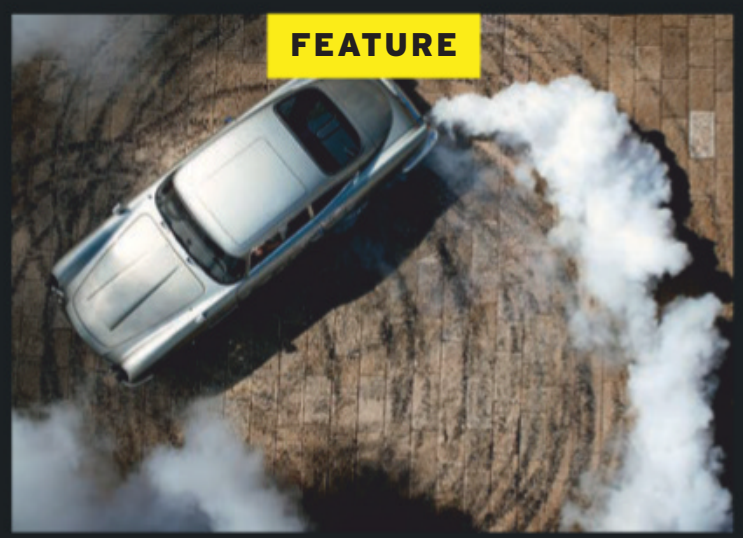
FEATURE

Bond behind the scenes
We visit the set of the new 007 film to see Aston stunt cars in action

EVERY WEEK

ROAD TEST

Skoda Superb iV
Skoda's first plug-in hybrid faces the toughest test in the business

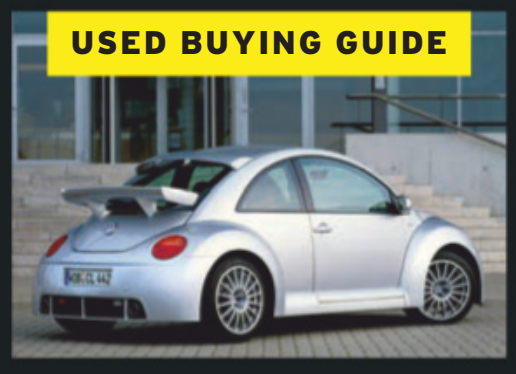
USED BUYING GUIDE

Volkswagen Beetle
This icon was revived in 1998 and lived on for 13 years. Here's what to look for

LONG-TERM TEST

Mercedes-Benz E300de
Andrew Frankel sums up life with this diesel-electric plug-in hybrid

SUBSCRIBE autocar.co.uk/subscribe or see p40

CONTENTS SUBJECT TO CHANGE

OUR CARS

FEATURED THIS WEEK

FORD RANGER RAPTOR

MAZDA 3

MERCEDES-BENZ E300de

SKODA SUPERB

TOYOTA COROLLA

VOLVO S60

FORD RANGER RAPTOR

The big pick-up doesn't really suit UK daily life. But that didn't stop us falling in love

Cabin just about feels worthy of a car costing £50,000

FINAL REPORT **MILEAGE** 15,018

WHY WE RAN IT
To discover if it's as capable as we think it is – or if it's just silly

I know it's ridiculous, but I've enjoyed it, okay? The Ford Ranger Raptor is based on a commercial vehicle but no longer tows or holds enough to be classed as one. It's an off-roader developed in Australia, tested in the outback and modelled on recce trucks used on the Dakar Rally, but I work in Twickenham.

It's a slightly ludicrous machine, then, to have enjoyed thoroughly, but here we are. It helps, of course, that it's a large family car, capable of towing 2.7 tonnes of caravan/horsebox/trailer, and returns nearly 30mpg, which is still a perfectly acceptable set of abilities and statistics, even without it looking like it can go places you can't really walk. Which, of course, it can.

I've done exactly that several times while the Raptor has been with us. We'd had it less than a week when it acted both as a support car during our Britain's Best Driver's Car shootout and as a video foil for the Bowler Bulldog on a desolate Welsh mountainside – my first experience of the Raptor's wet-rock skipping skills and 283mm ground clearance.

That's just one of a set of fairly impressive numbers. Its approach angle is 32.5deg, and wade depth some 850mm – which I came a bit closer than expected to testing in a 'how to off-road' video yet to air.

The other numbers – breakover and departure angles of 24deg – are less impressive, but that's because this car is 5398mm long on account of it having a pick-up load bed.

These are a mixed blessing on a car that has crossover appeal in the traditional, not jacked-up-hatchback, sense of the word. Tax advantages mean double-cab pick-ups cross from being weekday commercial vehicles to weekend family cars much more easily than vans. Being able to sling whatever work kit you want into the back – dirty tools, building materials or, in our case, videographers – and hosing out what's left when the work's finished is really handy.

But it is not like having a car with a big boot. Whatever family gear you place in the back will still slide around and, if the bay is wet or muddy, in short order so too is whatever else you put in there. It's not a car that makes the weekly shop easier, unless you want to churn your own butter on the way home. So it pays to have – I hesitate to use the words – an active lifestyle, and use the bay for outdoorsy kit. Everything else has to go in the cabin.

From when the car arrived with 5000 miles on it until it returned to Ford with 15,000, I've quite enjoyed the Raptor's cabin. It's a tall leap into it but there's a beefy step each side, and Ford has retrimmed the cockpit so that it feels, just about, fitting of a £50,000 vehicle. The seats move

Ranger to the rescue: its own problems were few and minor

Pick-up came in handy at our big Anglesey shoot

Prior made the most of Raptor's off-road abilities

> "It doesn't make the weekly shop easier, unless you want to churn your own butter"

SECOND OPINION

The Raptor is hard to resist. It looks extraordinary and it's a hoot to drive. It's well made, comfortable and quiet, and some of its more extreme hardware works amazingly well. The super-aggressive tyres are quiet, the off-road dampers give great on-road body control and the steering is nicely weighted and pretty accurate. For the first half-hour, you convince yourself it could fit into your life. But it never would. It's far too long, far too expensive and, well, far too diesely. Shame, though... **SC**

electrically and are heated, there's full climate control, phone mirroring and a heated windscreen. You can't ask for more than that, can you?

Well, apparently you can, in the 'shove' department. The Raptor comes with a 2.0-litre twin-turbocharged diesel engine that, some say quite loudly on social media, isn't fitting for a car with the Raptor badge, because in the US the F-150 Raptor has a big, vee-shaped petrol engine. Well. It turns out that the Mustang's V8 does fit in a Ranger and a version is in development. In Australia. But given how hard Ford will find it to meet European overall fleet emissions limits anyway, I'd say there's an approximately 0% chance of it officially arriving in the UK.

So a 2.0-litre diesel it is, making 210bhp and 369lb ft, which – usually quietly – drives through a 10-speed automatic gearbox, mostly smoothly. Only when cold and accelerating onto a quick road does it ever feel jerky. For the most part you'll leave it in two-wheel drive, but there are four high and four low ratios, too. In mostly 2WD driving, with a bit of low-ratio hoonage now and again, the Raptor has returned 28mpg in my hands. And given it's based on a commercial vehicle, service costs are reasonable – it wants an inspection every year (£105) or a service at 12,500 miles/two years, at £255, which is what ours needed during its time with us. Otherwise, occasional AdBlue (a litre at just under 300 miles and a 20-litre tank) and a faulty air temperature sensor (replaced under warranty) was its only outside attention needed.

The modest engine means the Raptor is a 10.5sec car over the 0-62mph dash, which sounds quite leisurely but honestly is fine. And Ford has done what it can to make the Raptor more capable and enjoyable to drive both on and off road. The load and towing capacity are reduced from the standard Ranger because of a mammoth amount of work that has gone into the chassis. Rear coil springs replace the rear leaf springs that are so common on pick-ups, while it has trick Fox dampers, with bypass valves that give a soft middle phase, firming up at each end to maintain initial control and stop them harshly bottoming. It's a spectacular trick that gets better as you go faster, and never gets old.

The only problem is that, living in the UK, you have to search hard to find the places to experience the best of this car. But the same is true of a supercar – an off-road equivalent of which is, in a way, just what this car represents. I've loved it.

MATT PRIOR

OWN ONE? SHARE YOUR EXPERIENCE
matt.prior@haymarket.com

TEST DATA

FORD RANGER RAPTOR

MILEAGE	
At start	5120
At end	15,018
PRICES	
List price new	£47,874
List price now	£49,324
Price as tested	£48,594
Dealer value now	£42,000
Private value now	£40,500
Trade value now	£38,500
OPTIONS	
Ford performance paint £720	
FUEL CONSUMPTION AND RANGE	
Claimed economy	26.4mpg
Fuel tank	80 litres
Test average	28.1mpg
Test best	29.6mpg
Test worst	26.7mpg
Real-world range	495 miles
TECH HIGHLIGHTS	
0-62mph	10.5sec
Top speed	106mph
Engine	4 cyls, 1996cc, twin-turbo, diesel
Max power	210bhp at 3750rpm
Max torque	369lb ft at 1750-2000rpm
Transmission	10-spd automatic
Boot	na (payload 758kg)
Wheels	8.5Jx17in alloy
Tyres	285/70 R17, BF Goodrich K02 all-terrain
Kerb weight	2510kg
SERVICE AND RUNNING COSTS	
Contract hire rate	£712 pcm (approx)
CO_2	233g/km
Service costs	£255
Other costs	AdBlue (40 litres) £30
Fuel costs	£2097
Running costs inc fuel	£2382
Cost per mile	24.1 pence
Depreciation	£7374
Cost per mile inc dep'n	72 pence (over 15k miles)
Faults	Air temperature sensor replaced
PREVIOUS REPORTS	
13 Nov '19, 20 Nov, 2 Jan '20, 15 Jan, 22 Jan, 5 Feb	

LOVE IT

GRIPPY TYRES

Highly rated BF Goodrich tyres lived up to expectations, helping the car find grip in poor conditions.

HEATED SEATS AND SCREEN

A great winter car given how quickly the seats heat and the windscreen clears even the thickest frost.

THOSE RUGGED LOOKS

Call me a redneck but I love its pumped appearance – down to the skid plate and thick towing eyes.

LOATHE IT

SIZE MATTERS

The 2180mm width and length are problems in car parks. Makes the Volkswagen Touareg feel wieldy.

TRICKY CROSS RAILS

Cross rails over the load bed need a key to unlock them and a spanner to move them. They've stayed put.

DEPRECIATION IS CALCULATED FROM TAKING THE TRADE VALUE FROM THE ORIGINAL LIST PRICE MINUS OPTIONS

More amazing Road Tours in 2020

Corsican Adventure

10-15 May 2020.
£2600 per car (2 people).

The event is a 2000 mile, 6-day road tour that travels to Chalons-en-Champagne, Mont Ventoux, Corsica, including crossing the island west to east and south to north along purely mountain roads, the Col de Turini, the Col du Galibier and Challes-les-Eaux. All cars are welcome.

Alpine Adventure

2-7 July 2020.
£2900 per car (2 people).

The event is a 2000 mile, 6-day road tour that travels to Lake Lucerne, the San Bernardino Pass, the Umbrail Pass, the Stelvio Pass, the Bormio Pass, Innsbruck, the Grossglockner Pass, Villach, the Austrian F1 GP at the Red Bull Ring, Salzburg and the Nürburgring. All cars are welcome.

Pyrenees Adventure

18-22 September 2020.
£2300 per car (2 people).

The event is a 2000 mile, 5-day road tour that travels to Bordeaux, Lourdes, the three highest passes in the Pyrenees including the Col du Tourmalet, Port d'Envalira and Port de Pailheres, Ax-les-Thermes, Andorra la Vella, Ripoli, the Millau Viaduct, the Massif Central and Vichy. All cars are welcome.

VOLVO S60

A family trip to Jersey was the perfect chance to explore the saloon's versatility

MILEAGE 2114

WHY WE'RE RUNNING IT
To find out if the magic touch Volvo has with its premium SUVs translates to this compact executive saloon

Since arriving at Autocar, the S60 has spent most of its time shuttling to airports or on short local trips to and from my Hertfordshire home. It was enough to give a glimpse of its character, but I felt I needed an extended spell in the Volvo to really get under its skin, not to mention properly run in that turbocharged 2.0-litre engine. Fortunately, the opportunity to properly stretch soon arose when I needed to spend a few days away visiting family in Jersey.

The early morning drag south for the ferry from Poole certainly played to the S60's strengths. With the kids snoozing in the back and the boot full to bursting, the sybaritic Swede soothed us all the way. For starters, the seats are superb, supporting in all the right places – the adjustable thigh support a real highlight. It's quiet too, with little wind noise and the engine barely at tickover even at motorway speeds. And on good roads the ride is compliant, adaptive dampers helping you slip serenely along.

Space is great on the inside, but there's not always much outside

On Jersey there's a blanket 40mph speed limit, which sounds frustrating until you realise that to drive much faster on the narrow and high-hedged roads would be lunacy. It certainly suited the laid-back Volvo, the buttery-smooth auto's early upshifts and hushed engine's low-speed muscle helping you settle into the more relaxed pace of local traffic. Another incentive for taking it easy is that despite its 'compact' executive status, the Volvo only just squeezes between the dry stone walls and the white lines on most roads.

There are chances to be a little less circumspect, such as when powering up the stretch of road out of Bouley Bay that's regularly closed off for hillclimb events. Here the Volvo confirmed earlier impressions that it's precise, composed and grippy, but not a car that's necessarily gagging for a good time. On the plus side, with more revolutions on its crankshaft, the forced-induction four is getting looser and more energetic. The T5 is a properly rapid device, particularly when overtaking opportunities arise.

Less impressive, away from motorways at least, is the ride. Early impressions had suggested that our Inscription, with its smaller wheels and adaptive dampers, would serve up some suppleness. Yet while it's better than R-Design machines, there's still room for improvement. It's over ragged surfaces (like you find on most of the UK's – and Jersey's – A- and B-roads) that it suffers most, the springs and dampers coming over all brittle, causing the car to patter over the surface rather than pummel it into submission. Over really bad stuff, there's even some hollow bump-thump noise from the rear suspension. Not intrusive by any means, but loud enough for you to notice. And that's in the dampers' normal setting – switching to Sport makes it even more unyielding.

It's a shame because the rest of this S60 is such a refreshing antidote to the normally thrusting 'sportiness' of cars in this class. For instance, the cabin is a masterclass in calming minimalism – just the thought of climbing aboard has my blood pressure dropping away. It's well designed too, the touchscreen infotainment being one of the better systems for clarity and responsiveness, helping offset the fact that most of the car's functions can only be accessed via the screen – although there is a good old-fashioned volume knob for the (very impressive) Bowers & Wilkins stereo.

There are other highlights too, such as the adaptive matrix LED headlights that never get wrong-footed by oncoming traffic, saving other drivers' retinas by effectively masking them off from the impressive intensity of full beam.

Back on the mainland, the Volvo settled nicely into its familiar routine of hops to Heathrow and domestic duties. Yes, the tetchy ride still niggles and I'd like to see more than 30mpg overall (the best I've experienced so far is the 31.3mpg logged on the late-night run back from Jersey), but in all other respects my initial warmth for the thoughtfully designed and easy-going S60 remains. It's not necessarily better than the competition, but it is different – and for many that will be a good thing.

JAMES DISDALE

LOVE IT

SITTING COMFORTABLY
The seats are simply fantastic. Doesn't matter how long you sit in them, you emerge at journey's end ache-free.

LOATHE IT

LENS MUCKS UP
At this time of the year the reversing camera gets covered in crud quickly, making it pretty much useless.

TEST DATA

VOLVO S60 T5 INSCRIPTION
Price £39,185 **Price as tested** £46,940
Faults None **Expenses** None
Economy 27.8mpg **Last seen** 29.1.20

OWN ONE? SHARE YOUR EXPERIENCE
autocar@haymarket.com

BOTB
WIN YOUR DREAM CAR

GUARANTEED WINNER EVERY WEEK.

GLYN COTTON WINS PORSCHE 911 CARRERA 4 GTS + £20K CASH

WIN YOUR DREAM CAR!

£31 MILLION WORTH OF PRIZES WON SO FAR
TICKETS FROM JUST 85p

ENTER NOW AT BOTB.COM

TASIB HUSSAIN
AUDI RS4 AVANT + £20K

DARREN GODSON
BENTLEY CONTINENTAL GT + £20K

CRAIG VRETTOS
NISSAN GT-R RECARO + £20K

CHRIS PHILLIPS
LAMBO HURACAN EVO + £20K

MERCEDES-BENZ 300de

There's plenty of love for it in a cold climate – but at a cost

MILEAGE 10,777

WHY WE'RE RUNNING IT
Because a plug-in hybrid diesel seems like the best of both worlds. But can reality live up to the theory?

The winter tyres turned up just in time for the first properly cold snap of the season and, round where I live, you really need them – especially if your transport is a two-tonne rear-driver with no limited-slip differential. And the Pirelli Sottozeros are simply superb, just as they were in a somewhat different application on the McLaren 720S I ran before the Benz.

The greatest compliment I can pay them is that for the vast majority of the time you are unaware of their existence. There's little or no additional pollution of the steering, and an at most fractional degradation in ride comfort, but only on certain surfaces with small very high-frequency bumps. They are a touch noisier, but you only notice that because the rest of the car is so damn quiet when driving in electric mode, which I do as much as possible.

Talking of which, the cold weather is having an interesting effect on the car's electric range. What I love is that I can go out to a car that is frozen solid, turn on the heating, defrosters and seat warmers and within minutes have a beautifully toasty, de-iced car without having to feel guilty about starting the engine and leaving it running, or freezing my fingers with the scraper. And the screens clear far more quickly than they would were you just using an internal combustion engine.

But doing that and then keeping the interior warm does take its toll on the electric range. Usually, I can get 24-25 miles from it, mostly covered on fast A-roads. But in this weather, if I preheat the car, I can do about 17 miles before my tranquillity is rudely interrupted by the angry outpourings of the stone-cold diesel. It is possible the additional rolling resistance of the winter rubber is playing a part here but, until I do some longer journeys, it's impossible to tell.

And longer journeys it will do. I'm off to Durham in it shortly to visit a daughter, and a colleague is taking it to Paris, and although I appreciate the silence on short trips, it's when it is allowed to stretch its legs that the 300de performs at its best. I particularly like how configurable the main instrument pack is and how it lets you choose the way information is presented according to your mood. I almost always end up with 'Classic' dials because I'm a middle-aged man driving a Mercedes estate, but I quite like the look of 'Progressive', too. 'Sport', however, does not work, at least not in this car...

Otherwise, the Benz continues to perform impeccably the beast-of-burden role to which it was born. There are drawbacks to its unique diesel-hybrid powertrain and, given the way the world is now turning against even plug-ins let alone diesel, I suspect that, as a concept, it will not now be broadly followed by others. But I shall extemporise further on that and more fully about my time with the car in its final report in a few weeks' time.

ANDREW FRANKEL

Arrival of winter tyres was very timely

LOVE IT

WINTER WINNER
The ability to completely pre-condition the interior of the car and clear the screens with no effort, sound or emissions.

LOATHE IT

THAW LOSER
The effect on range that thawing the car in advance has on a cold day. You can lose a quarter of your electric range before you've set off.

TEST DATA

MERCEDES-BENZ 300de ESTATE
Price £49,700 **Price as tested** £58,115
Faults None **Expenses** None
Economy 59.8mpg **Last seen** 5.2.20

OWN ONE? SHARE YOUR EXPERIENCE
autocar@haymarket.com

OUR CARS

Skoda Superb Estate

MILEAGE 5610 **LAST SEEN** 5.2.20

The Superb's capacious, 660-litre boot gobbles up my expansive collection of photography kit with the enthusiasm of a starved Cookie Monster and still has room to spare. Meanwhile, the car's ride is other-worldly good; you can leave your 'magic carpet' at home. Whisper it, but from a purely pragmatic point of view, I think this might be the best long-term test car I've ever had. **OK**

Toyota Corolla

MILEAGE 5690 **LAST SEEN** 15.1.20

Entering a postcode into a sat-nav should be quick and easy. Sadly not in the Corolla, where numbers are hidden on a separate keyboard from letters. So you type the first letters, press a 'Change Type' button, then select the number keyboard. You can then type the numbers, before switching back keyboards to put the letters in. Deeply tedious. **JA**

Mazda 3

MILEAGE 6446 **LAST SEEN** 12.2.20

A few weeks ago, I caught one of my neighbours ogling the 3 for a good while. He's now got one on his drive. Desirability sells and, from the looks I've been getting, the svelte Mazda can be flogged on that alone. It got me thinking: with sub-£30k coupés all but dead, this is probably the closest you can get to something like a VW Scirocco these days. **LA**

USED CARS

What to buy, where to buy it and how much to pay

James Ruppert

THE HIGH PRIEST OF BANGERNOMICS

Boxsters can be cheap but check them out carefully

TEUTONIC ORDER

A reader wants a classic – and only a BMW or Porsche will do

It is always jolly good and very flattering to be asked what you, dear reader, should buy. Resh put it very simply when he said he wanted to buy a classic: it had to be a BMW or Porsche – he could not quite decide which one – and have six or eight cylinders and a manual gearbox.

First, we need a definition of 'classic' and it certainly isn't something rusty from the 1970s. We are shopping mostly in the 2000s here.

Right now, Porsche Boxsters are still relatively cheap, often because they've had 27 owners, and they do need a short checklist of things to be ticked before buying. What you get here is a very 911-like convertible with a six-cylinder engine for just a few thousand quid.

A 2002 2.7 Boxster with 100,000 miles and some reassuring bills is £2995. Maybe too cheap. Then you get wonderfully sucked into it all and a 1999 £3995 early 2.5 with a hard top and full service history seems like the best cheap and cheerful to have.

I adore early Boxsters but, for so many people, the only real Porsche is a 911. You need deep pockets to buy and run any Porker, but the 996-generation 911 is still relatively affordable, although they are starting to go up in value. As with Boxsters, care is always required and buying purely on price is a mistake. We do have to dodge the Tiptronic ones, which rules out roughly two-thirds of those on sale. Still, £9995 gets you a 2001 Carrera 2 cabriolet in a seemingly decent condition and with a history. Personally, I prefer a roof and a 1998 full-service-historied Carrera 2 at £10,995 seems like an excellent way forward – classic and affordable enough to make sense.

As for BMWs, the choice of models is immense. There is, though, only one M. Dodging the seemingly colossal amount of cheapish cabriolet M3s, I settled on a 2003 coupé with 103,000 miles, for which £10,000 seems very reasonable. Then again, trading up to a 2007 V8 with 110,000 miles costs not much more, at just over £11,500. Is it a classic yet? We'll never see a V8 M3 again, so it probably is.

> "A 2002 2.7 Boxster with 100k miles and old receipts is £2995"

A 5 Series? Obviously. I'd be inclined to go for an Alpina for the added rarity. A 2000 B10 3.3 manual with just under 90,000 miles for £10,995 seems like a very sensible place to put your classic-car-buying money. Estoril Blue, too. Manual, when so many seem to be automatic.

Finding something classically German from the past 20 years is easy enough, then, and we didn't go near an Audi or VW. Maybe next time.

You can pick up a tidy Alpina B10 for just under £11,000

WHAT WE ALMOST BOUGHT THIS WEEK

VAUXHALL NOVA 1.2 MERIT SALOON

Described as a 'garage find' and owned by the same gent since 1995, this 1989-reg Nova saloon is just £850. It's a budget classic with an unmarked interior dressed with brittle plastic and clothed in a body that's only superficially rusty. It could be your passport to a happy summer spent trophy hunting at concours d'inelegance events up and down the land.

TALES FROM RUPPERT'S GARAGE

MILEAGE 64,654

VOLKSWAGEN GOLF

The Golf's nearside indicator glass had been a bit foggy and damp for a while. The plastic inspection cover under the wheel arch had popped off or it got knocked out of place during the great oil change fiasco of 2019. Anyway, my daughter sent off for the part, which was a fiver from a VW parts supplier and arrived in a couple of days. First off, though, the glass area needed to be dried out. We wrecked an old hairdryer and then used a thin screwdriver and some rag to wipe the glass dry. It took a couple of hours, but I was mostly watching, so it was dead easy.

F is for Daihatsu Fourtrak

Yes, you could spend loadsamoney on a Land Rover Defender instead. But this handy-sized 4x4 is so capable. We'd go for the independent-suspension models and totally ignore the normally aspirated diesel, or petrol. The 2.8 Turbo is best.

The really interesting thing about the Fourtrak is that it hasn't changed much over the years. Stick a non-year plate on one and there is no telling how old it actually is. So there really is an alternative to the ubiquitous and often expensive Defender that is just as practical and able but with the edge on build quality, comfort and sheer value for used 4x4 money. Can't think of a higher compliment than that.

A 1996 TDS Fourtrak with 250k miles is £1000.

READERS' QUESTIONS

QUESTION Given that new cars are getting greener, isn't it time insurers started using recycled parts when repairing damaged vehicles? Doing so might help reduce premiums, too.

Terry Porter, Newbury

ANSWER Insurers and the Vehicle Recyclers' Association are, right now, exploring how they can use recycled, non-safety-critical parts in car repairs. The challenges include sourcing and delivering parts to bodyshops without delay. If successful, it could speed up repairs and reduce total losses. **JE**

QUESTION Where do ex-lease and former PCP cars go and where can I buy one?

Gordon Phillips, via email

ANSWER Many of those that are returned to the leasing company or the car maker's finance division, rather than being part-exchanged, go to auctions, where dealers, traders and the public bid for them. Such sales are easy to identify on an auction house's calendar. BCA Assured vehicles (BCA stands for British Car Auctions) are checked over by the AA. **JE**

UPDATE

In reference to Colin Skinner's question about the shortage of electric tow cars (Readers' Questions, 22 January), reader Julian Flack reports seeing plenty of Jaguar I-Paces towing caravans in Europe (in fact, the model's UK towing limit is 750kg so they must be small) and confirms the Tesla Model 3 can tow 2000kg (tow hitch cost: £1000). **JE**

SEND YOUR USED CAR TALES TO ✉ james@bangernomics.com **AND READERS' QUESTIONS TO** ✉ autocar@haymarket.com

AS GOOD AS NEW

FIAT 124 SPIDER

An alternative to Mazda's MX-5 on which it's based? You bet, says **John Evans**

Smart two-seater comes in manual and auto guises

Blink and you'd have missed them. The Fiat 124 Spider and its sister car, the more powerful Abarth, were on sale for just two years, from 2016-18. Fiat gave no explanation for their abrupt demise other than to say they were no longer on sale. Pundits reckoned its failure to get the Multiair engines through the tough new WLTP tests was the reason. Whatever the truth, their departure was a sad loss for sports car enthusiasts who were now denied a capable and distinctive alternative to the brilliant but ubiquitous Mazda MX-5 Mk4 on which they were based (they even share interiors).

That's enthusiasts wedded to buying new, by the way. The good news is there's a decent number of used Fiat and Abarth 124s on the used car market at prices ranging from around £11,000 to £22,000. We've already covered the Mazda in this section (24 April 2019) and we'll resist the temptation to refer to it again here, save to say that it's useful to compare its prices with the 124's. For example, as this was written, £11,800 would bag you an approved used 2017-reg MX-5 1.5 SE with 15,000 miles but, for the same money, there's a younger, approved used 2018-reg Fiat 124 Spider 1.4 Multiair Classica with slightly less mileage. So, based on this snapshot, the 124 looks a better buy, except there are many more MX-5s for sale at a wider range of prices.

Anyway, we said we wouldn't dwell on the MX-5. The 124 is powered by a 1.4 Multiair engine producing 138bhp; the Abarth the same engine but making 168bhp. It's the sportier of the two with stiffer suspension, stiffer anti-roll bars, a limited-slip diff, stronger brakes and a 'racing anti-glare kit' (a matt paint finish on the bonnet, to you and me). It comes in automatic Sequenziale Sportivo or manual guises. You might think the manual would have been the more popular version, but on the used market availability is split 50:50. The auto's appeal probably lies in its steering wheel-mounted paddles and provision of a Sport mode. Price-wise, the auto costs about £1500 more with a 2017/17-reg on 12,000 miles coming in at around £18,400.

Meanwhile, the manual is available in standard and what, at the time, Fiat described as more elegant Scorpione trim. Prices start at £16,400 for a 2017/67-reg Scorpione with 14,000 miles.

But you don't have to spend that. Prices for the Fiat 124 Spider begin at around £11,000 for a 2017-reg Classica with 22,000 miles. The Fiat is softer and mellower than the Abarth and in many ways a more compelling alternative to the MX-5 (sorry). It, too, is available in automatic guise, but this time the manual version is way more plentiful. Entry-level Classica trim is a bit basic so stretch to mid-level Lusso if you can. We found a 2017-reg with 20,000 miles for £1500 more than that Classica. No question: Fiat and Abarth 124s are interesting cars and great value – worth remembering when you're shopping for that MX-5.

TOP SPEC PICK

FIAT 124 LUSSO PLUS

We prefer mid-level Lusso but Plus does add a Bose sound system with headrest speakers (handy when the roof's down) and adaptive LED headlights with daytime-running lights.

SEVEN-SEAT CARS BEST LEASE DEALS

SEAT ALHAMBRA 1.4 TSI 150 SE L
£1850 deposit, £308 per month, 36 months, 10,000 miles per year
Seat has dropped its smallest petrol car, the Mii, but its largest ploughs on. The Alhambra is comfortable, spacious, well equipped and good to drive. The 1.4 TSI petrol engine is up to the job, too.

VOLKSWAGEN SHARAN 1.4 TSI SE NAV
£2653 deposit, £442 per month, 36 months, 10,000 miles per year
The Alhambra's sister isn't such good value but has a stronger image, plus the Seat's virtues; its faults, too, including unrefined diesel engines and an inconsistent ride. Again, the 1.4 petrol engine has the measure of it.

BMW 218i SE GRAN TOURER
£1857 deposit, £310 per month, 36 months, 10,000 miles per year
Frugal engines, a high-quality interior and plenty of standard equipment are the highlights, but poor third-row seat space and firm suspension take the shine off on comfort. It's a competitive deal, though.

NEED TO KNOW

- Fiat and Mazda approved used schemes offer similar benefits: a 12-month warranty and 12 months' breakdown cover (both extend to Europe), and a multi-point, pre-purchase inspection.
- As with any convertible, check the 124's interior for water leaks (running the car through a car wash is a good idea). Also check the body for damage or poor accident repairs and the wheels for kerbside scuffs (especially larger-wheeled variants such as the Lusso).
- The 124 looks longer than the MX-5 – and it is, by 139mm.
- More powerful Abarth has limited-slip diff and Bilstein dampers, also found on MX-5 2.0 Sport Nav.
- Entry-level Fiat 124 Classica trim goes without a DAB digital radio, which is some oversight.

OUR PICK

FIAT 124 SPIDER 1.4 MULTIAIR 140 LUSSO

The engine pulls well from low revs while mid-level Lusso spec is a smart blend of the luxurious and essential, with items such as a silver windscreen frame and rear parking sensors.

WILD CARD

ABARTH 124 1.4 MULTIAIR 170 GT

This most expensive 124 features a carbonfibre hard top weighing 16kg and providing, claims Abarth, a quieter drive and an 80% clearer view than the soft top. Used ones cost from £20,000.

ONES WE FOUND

- 2017 124 Classica, 22,000 miles, £10,999
- 2017 124 Lusso Plus, 31,000 miles, £13,000
- 2018 124 Lusso, 5000 miles, £15,795
- 2019 Abarth 124, 2000 miles, £22,000

Whisper it... the 124 is a Mazda MX-5 on the inside

Abarth is sportier, but Fiat 124 has 'mellow' charm

VOLKSWAGEN TOURAN 1.5 TSI EVO FAMILY

£2129 deposit, £355 per month, 36 months, 10,000 miles per year

If the idea of an MPV as big as the Sharan doesn't appeal, check out the Touran. It still has plenty of space and is good to drive, while it's tough enough to take everything the family can throw at it.

LAND ROVER DISCOVERY SPORT 2.0 D150 2WD

£2434 deposit, £406 per month, 36 months, 10,000 miles per year

You get versatility and flexibility with this seven-seater that's as happy on the high trail as it is the high street. Refined engine, so-so economy and iffy reliability.

HYUNDAI SANTA FE 2.2 CRDi PREMIUM 4WD

£2571 deposit, £428 per month, 36 months, 10,000 miles per year

No-nonsense SUV with a big boot and cabin, and stacks of equipment. Perceived cabin quality is not as good as some but its reliability definitely is.

For more lease deals, visit whatcar.com

BUY THEM BEFORE WE DO

AHEAD OF ITS TIME AUDI

Audi A2 1.4 SE £3000

Our selection of affordable mould-breakers kicks off with the chic A2. Launched in 2000, it was not only the first European production car to average 94mpg but also the first mass-market vehicle to feature weight-saving concepts in its construction, with aluminium the principal material.

The UK got very few of the economy-busting 1.2-litre diesel versions. Instead, buyers could choose from 1.4 and 1.6-litre petrols, and a 1.4-litre diesel in two outputs. Today, it's the 1.4 petrol and lower-powered 1.4 diesel (they each produce 74bhp) that appear to have weathered best. The direct-injection system in the 1.6 petrol can be troublesome, ditto the dual-mass flywheel in the 89bhp 1.4 diesel. This engine's turbo suffers carbon build-up, too.

At this age, provenance, condition and history should be uppermost in your mind. Find a good one and you could be sitting on a future classic.

We think we have, although the 2002-reg car is a little pricey and its mileage – 28,000 – is a concern. It doesn't bode well for the condition of the cylinder bores and anything else that has had to work in the cold with insufficient oil. Fortunately it has a full service history, although we'd like to know if that means a fettle each year or every 10,000 miles.

This engine can suffer coil pack issues (we found an example claiming all packs had been replaced). We wouldn't expect our car's cabin to be much worn, but the satin finish on controls can wear away. Checking the oil is a simple job of opening the front flap. To raise the bonnet you release a couple of catches and away it comes.

JOHN EVANS

CUTE COMPACT A-CLASS

Mercedes A190 Elegance
£1495

The A-Class of 1997 was a mould-breaker for its C-Class-size accommodation in a small footprint with an engine designed to slip safely away under the car in a crash. We spied an immaculate 2002-reg with 39,000 miles and full service history.

BANGLE'S BULLSEYE BMW

BMW 745i SE auto
£5950

"Only people who say 'I've got to not like something' have a problem with it," said Chris Bangle in defence of his E65 7 Series of 2001. This 2004-reg 745i SE has all the gizmos, a full BMW history and one owner, proving Bangle hit the bullseye.

WILD CARD

Mazda RX-8
£3995

The RX-8 wasn't the first car with a rotary engine but it's the only one with rear 'suicide' doors. Motors can last 100,000 miles or so, so we plumped for this 2008-reg, one-owner example with 47,000 miles and a recent compression test.

RAPID SWEDISH WAGON

Volvo 850 T-5R estate
£7989

The 850 T-5R of 1995 changed people's perception of Volvo, although in subsequent years the car maker did little to build on it. But it was fun while it lasted. Our find, a right-hand-drive import from Japan, has just 69,000 miles and is rust-free.

AUCTION WATCH

LAND ROVER DEFENDER WORKS V8

Production of the old Defender ceased in 2016 but as minds turned to its replacement, Land Rover celebrated the model's 70th anniversary in 2018 with the launch of the Works V8. Powered by a 5.0-litre Jaguar engine producing 399bhp and 380lb ft and with an eight-speed automatic gearbox, the new edition was built around specially selected examples of nearly new Defender 90s and 110s. Land Rover's Classic division assembled 150 of them. Prices started at £150,000 and within a month they'd sold out. A 90 Works with 57 miles was sold at auction recently for £129,000. No investment, then.

FUTURE CLASSIC

Toyota Celica 1.8 VVTL-I GT Price £5490

Not an obvious future classic, but the seventh-generation Toyota Celica GT of 2006 has many of the qualities necessary to qualify. For one thing, it's a dedicated coupé and not a hatchback with the rear doors filled in. It looks the part, too, with its reduced ride height compared with the standard model, its oversized, Supra-like rear spoiler and its neatly integrated bodykit. Also in the mix is a revvy, variable-valve 1.8-litre motor and a sweet-changing six-speed 'box. Finally, few exist and it was made by Toyota, so it'll never break.

CLASH OF THE CLASSIFIEDS

USED CAR DESK DOES BATTLE

BRIEF

Find me a Ferrari-beater for less than £35,000.

Chevrolet Corvette Z06 £34,970

Audi R8 V8 £34,995

MAX ADAMS When you need to outmuscle a Ferrari, get yourself a Corvette. But not just any old 'Vette; find a Z06 as I've done and you'll have a monster 7.0-litre V8 with 505bhp. What's more, 0-60mph is rattled off in just 3.9sec and the top speed is 198mph. Beat that, Mr Pearson.

MARK PEARSON Ha! Easy. I don't have to dazzle with figures 'cos what I've got is a manual Audi R8 quattro with just 40,000 miles on the clock. This is the car that shoved it to Ferrari in spectacular fashion: no mid-engined supercar was as finely balanced or as densely engineered. See? It's a high-performance car for the discerning, unlike that lairy Corvette.

MA I don't think anyone would describe a Ferrari as being subtle, so my little red 2008 Corvette still fulfils the brief. And it does a dirty great burnout all over it.

MP Pah! Pumped-up kicks. What you want is maximum on-the-limit driver enjoyment, and guess what gives you that?

MA A Ferrari, obviously. But the next best thing is my Corvette.

MP I think you'll find my 2008 R8 is practically a Lambo.

MA I think it's just a jumped-up TT. What say you, John?

VERDICT

Cor, that 'Vette looks the business. I'll take it. **JOHN EVANS**

HOW TO BUY A

BMW X5

Efficient Dynamics
X5's eco-friendly tech boasts brake energy regeneration, active air flaps and more efficient air-con.

PROCEED WITH CAUTION

An E70-generation X5 might look like a steal but the list of potential pitfalls could turn a bargain into a money pit. **John Evans** finds out more

Read 'Buyer Beware' over on the right and you might wonder why we're spending time on this second-gen X5, launched in 2007. Weak timing chains, disintegrating swirl flaps, leaky suspension airbags... the list goes on. Specialists were unanimous in their condemnation of the vehicle, while one leading used car warranty company rates the vehicle as poor, with an average repair bill of £612. Axles and suspension attract the lion's share of claims, followed by the electrics and the engine.

Why buy one? Good question, but people do, tempted by prices starting as low as £4000 for the 232bhp 30d diesel, but rising to £24,000 for the monster 547bhp X5 M. There's a diesel M50d, too, with a triple-turbo 3.0-litre engine making 375bhp and 546lb ft – 45lb ft more than the petrol M. We found a BMW approved used 2013 example with 55,000 miles for £21,250. Late-plate cars like this one, or facelifted, with low mileage and a genuinely full history, is the way to go with an X5 of this generation.

The E70 capitalised on its predecessor's success by offering more space (it was sold with an optional third row of seats), greater technical sophistication and a higher level of luxury. Power came from a range of petrol and diesel engines, the most popular being the 232bhp 3.0 diesel, and gearboxes were automatic only. A year after launch, the 3.0sd arrived with two turbos and 282bhp. Later, this model was renamed xDrive 35d, and the 232bhp version was rebadged xDrive 30d.

Petrols were a choice of 3.0 and 4.8-litre units and, from 2009, the mighty 4.4-litre twin-turbo in the X5 M, but they sold in small numbers. The petrols are potentially less troublesome and, if your mileage is low, could be a good, if thirsty, alternative to a diesel. We found a privately advertised one-owner, 2007-reg 4.8i SE with 55,000 miles, a full BMW history and the balance of a BMW extended warranty for £9995. Like the diesels, this and the 3.0 were later renamed xDrive 48i and 30i.

The facelift came in 2010. BMW called it a Life Cycle Impulse and, in the X5 world, E70s are either pre- or post-LCI. LCIs are distinguished by restyled bumpers and headlights; inside, the infotainment system was updated. Engines were also cleaned up (they all meet Euro 5 standards) and made more powerful, and some were renamed. For example, the 30d rose from 232bhp to 241bhp, while the 282bhp 35d went to 302bhp, in the process being renamed 40d. Among the petrols, the 350bhp 48i became the 402bhp 50i. In 2012, towards the end of the X5's life, the M50d, one of a number of new M Performance BMWs, appeared.

The X5 has standard air-con, cruise control, leather trim, parking sensors and auto wipers and lights. M Sport trim is the most plentiful, followed by SE. Many have the optional panoramic sunroof. Make sure it works because, like the rest of the vehicle, sometimes it doesn't.

Leather, air-con and parking sensors all come as standard

The X5 M produced a mighty 547bhp from its V8 engine

> Why buy one? Good question, but people are tempted by prices starting as low as £4000

HOW TO GET ONE IN YOUR GARAGE

An expert's view

JUSTIN, GROSVENOR GARAGE

"The X5 E70 is unreliable but people buy them because they're so cheap. Some are over £20,000 but plenty more cost from £4000 to £10,000, which is where you run into problems. They look like value, but the next thing they're spending lots of money on repairs. Some faults aren't immediately obvious. For example, the rear suspension airbags perish on a routine basis but the air pump keeps working, so the bags appear to be inflated, but one day the air pump packs up and the owner has doubled their repair bill. Buyer beware, indeed!"

Buyer beware

■ ENGINE

On LCI engines, listen for timing chain rattles from cold. On all engines, poor starting and rough running may be failing injectors. Exhaust smoke may be a failing electronic turbo actuator; listen for bearing noise, too. Later high-mileage diesels can suffer expensive DPF failure, which can also cause the engine manifold to melt. On early engines the glow plugs can pack up, requiring removal of the inlet manifold to replace; on later engines, they get stuck in the cylinder head. Injectors can fail on high-mileage cars.

■ TRANSMISSION

On early cars, check the front propshaft failure recall was actioned. It can snap, damaging the universal joint and puncturing the engine sump. The gearbox thrives on regular software updates. Earlier six-speed 'box suffers torque converter, mechatronic and clutch pack problems.

■ SUSPENSION

Bushes need changing at 90k miles. Check rear suspension airbags and be sure the air pump hasn't burned out.

■ WHEELS AND BRAKES

Check the electronic handbrake (it can lock in the 'On' position). Run-flat tyres are hard on the alloys – the inside rims fare worst. Check brakes and tyres because both are expensive.

■ BODY

Check for off-roading and towing damage, and for misted-up foglights.

■ INTERIOR

Make sure no warning lights are illuminated. The panoramic sunroof is very unreliable, so check it works.

Also worth knowing

The swirl flaps in the inlet manifolds fitted to early diesel X5s can break up. A revised version still failed. BMW specialists Grosvenor claim to have the solution in their custom-engineered swirl flaps made from aircraft-grade aluminium. It recommends replacing them every 60k miles or four years.

How much to spend

£4000-£6599
Early cars, some with up to seven seats and up to 150,000 miles.

£6600-£8999
Some 2008 and even 2009-reg cars, and mileages as low as 80,000.

£9000-£10,999
Last of the pre-facelift cars here with up to 120,00 miles, plus lower-mileage earlier models.

£11,000-£14,499
Plenty more 2010-reg, facelift 30d and 40d cars from here, with up to 125,000 miles.

£14,500-£16,999
More 2011-12-reg cars with around 75,000 miles.

£17,000-£22,000
Late-plate cars with high specifications and no more than 50,000 miles.

One we found

BMW X5 3.0D M SPORT XDRIVE, 2011/11-REG, 52,000 MILES, £14,699

A full BMW history is the standout feature, and just two owners suggests it's behaved itself. Tyres described as good. No panoramic sunroof but does ride on run-flats, so check the alloys.

Thanks to Darren Henson (dandtwise.co.uk), Chris Plummer (chrisplummerautomobiles.co.uk) and Justin (bmwspecialistreading.co.uk)

MidlandCredit.co.uk

Getting the Nation **Driving**

NEED CAR FINANCE?

BUY ANY CAR *from any* DEALER

Over £20 MILLION APPROVED EVERY MONTH!

FAST DECISION WITHIN 1 HOUR ✓ **NO DEPOSIT** ✓

POOR CREDIT ✓ **NO FEES** ✓

26.9% APR REPRESENTATIVE

THE UK'S **MOST TRUSTED** CAR FINANCE BROKER*

TRUSTPILOT

FINANCE FROM £3,000 to £50,000

NO ADMIN FEES

APPLY ONLINE NOW!

www.**midlandcredit**.co.uk

Or **Call us NOW on**

03339 00 00 00

Midland Credit Ltd is a licensed credit broker and not a Lender and is authorised and regulated by the Financial Conduct Authority for consumer credit FCA no. 732202. **26.9% Apr** representative written quotations available upon request , the rate you will be offered will depend upon your personal circumstances

ROAD TEST RESULTS

Facts, figures, from the best road tests

No one produces as thorough a judgement on a new car as Autocar. As well as acceleration, braking, fuel economy and noise tests, we carry out benchmark limit-handling tests, setting lap times if appropriate. But we don't just drive at the track, essential as it is for finding the limits of performance. We also drive on a wide range of roads. Where we have tested more than one model in a range, the rating is for the range overall. Where a model within the range meets our coveted five-star standard, it is highlighted in yellow.

» **30-70MPH** Indicates overtaking ability through the gears.

» **50-70MPH** Recorded in top gear (*kickdown with an automatic) and demonstrates flexibility.

» **FUEL ECONOMY** Figures quoted are the average and touring fuel economy as tested. The touring figure is representative of a 70mph cruise on a typical UK motorway. For electric cars, the figures quoted are for the same average and touring test schedules but are expressed in miles per kWh†. **Denotes mpkg (miles per kilogram) for hydrogen-powered fuel cell vehicles.

» **BRAKING 60-0MPH** Recorded on a high-grip surface at a test track.

» **MPH/1000RPM** Figure is the speed achieved in top gear.

Make and model	Top speed	0-60mph	0-100mph	30-70mph	50-70mph	Braking 60-0mph	Power (bhp)	Torque (lb ft)	Mph/1000rpm	Mpg or equivalent; test average/ touring	Weight (kg)	TEST DATE
ALFA ROMEO												
Giulia 4dr saloon ★★★★½												
Quadrifoglio	190	4.5	9.2	3.2	10.3	2.57	503	443	38.7	34/49	1580	29.3.17
Stelvio 5dr SUV ★★★½☆												
2.2D 210 Milano	134	6.8	20.6	7.0	7.3	3.01	207	347	41.3	38/50	1659	3.1.18
Quadrifoglio	176	4.0	9.4	3.3	5.9	3.31	503	443	36.4	22/32	1931	9.1.19
4C 2dr coupé/convertible ★★★☆☆												
Spider	160	5.1	12.4	4.0	5.8	2.97	237	258	29.6	32/44	940	27.1.16
ALPINA												
B3 Biturbo 4dr saloon ★★★★½												
B3 Biturbo	155	4.7	10.3	3.8	6.8	2.9	404	443	41.5	27/35	1610	29.8.13
ALPINE												
A110 2dr coupé ★★★★★												
Premiere Edit'n	155	4.7	10.8	3.8	6.5	2.6	248	236	28.1	28/46	1103	16.5.18
ARIEL												
Atom 4 Odr open ★★★★★												
4	162	3.2	6.9	2.4	3.5	2.59	316	310	24.5	27/39	680	9.10.19
Nomad Odr open ★★★★★												
Nomad	125	4.5	12.7	3.9	7.7	3.10	235	221	26.7	–/–	735	24.6.15
ASTON MARTIN												
Vantage 2dr coupé ★★★★½												
V8	195	3.7	8.3	3.0	10.5	2.7	503	505	42.6	18/25	1720	23.5.18
DB11 2dr coupé ★★★★½												
Launch Edition	200	4.0	8.4	3.0	10.1	2.6	600	516	46.2	24/34	1910	21.9.16
Rapide 4dr saloon ★★★★☆												
Rapide S	190	5.3	11.3	4.3	8.3	3.0	550	457	33.6	19/23	1990	20.3.13
DBS Superleggera 2dr coupé ★★★★★												
DBS Superl'era	211	3.7	7.4	2.7	9.5	2.5	715	664	42.7	19/26	1910	21.11.18
AUDI												
A1 Sportback 5dr hatch ★★★½☆												
35 TFSI S line	137	7.9	22.0	8.4	8.6	2.7	148	184	27.6	38/57	1209	2.10.19
A3 4dr saloon/3dr/5dr hatch ★★★★☆												
RS3 Saloon	155	4.0	9.9	3.5	9.0	2.7	394	354	33.7	29/35	1515	6.9.17
A4 4dr saloon/5dr estate ★★★★☆												
2.0 TDI S line	147	8.4	22.2	7.3	11.2	3.1	187	295	37.1	45/50	1940	4.11.15
S4 TDI	155	4.6	11.5	4.1	–	2.87	342	516	50.2	29/54	1871	18.9.19
RS4 Avant	155	4.0	9.6	3.5	11.0	3.0	444	443	38.4	24/37	1790	14.2.18
A5 2dr coupé/convertible ★★★½☆												
S5	155	4.9	11.7	4.4	9.7	3.0	349	369	40.5	26/33	1615	11.1.17
A5 Sportback 4dr saloon ★★★½☆												
2.0 TFSI S line	155	5.7	15.1	5.3	17.2	2.5	249	273	42.2	30/41	1535	8.3.17
A6 4dr saloon/5dr estate ★★★★☆												
40 TDI S l'e Avant	149	8.4	22.6	7.5	–	3.1	201	295	51.0	39/50	1710	14.11.18
A7 Sportback 5dr hatch ★★★½☆												
50 TDI Sport	155	5.8	14.9	5.3	–	2.8	282	457	49.0	29/53	1880	11.7.18
TT 2dr coupé/convertible ★★★★☆												
RS	155	3.6	8.4	3.0	7.8	2.7	394	354	35.1	27/37	1440	7.12.16
E-tron 5dr SUV ★★★★½												
55 quattro	124	5.4	13.7	4.2	2.5*	2.91	403	490	–	2.3/2.9†	2569	26.6.19
Q2 5dr SUV ★★★★☆												
1.4 TFSI Sport	132	8.1	23.9	8.2	9.8	2.7	148	184	29.4	45/56	1265	9.11.16
SQ2 quattro	155	4.5	11.6	4.1	9.2	2.72	296	295	33.4	27/35	1530	20.3.19
Q5 5dr SUV ★★★★☆												
2.0 TDI S line	135	8.3	26.4	8.5	14.7	3.1	187	295	42.0	37/43	1770	15.3.17
SQ5 quattro	155	5.5	13.7	5.0	11.1	2.6	349	369	45.2	26/32	1870	21.6.17
Q7 5dr SUV ★★★★☆												
SQ7 4.0 TDI	155	5.1	12.6	4.4	7.0	2.9	429	664	47.6	24/38	2330	26.10.16
Q8 5dr SUV ★★★★☆												
50 TDI S Line	152	6.9	19.1	6.6	10.1	2.8	282	443	44.9	29/40	2285	26.9.18
R8 2dr coupé ★★★★☆												
V10 Plus	205	3.1	6.7	2.6	5.7	2.8	602	413	26.8	15/23	1555	30.12.15
BENTLEY												
Continental GT 2dr coupé ★★★★½												
W12 First Edition	207	3.6	8.1	2.9	8.9	2.8	626	664	52.4	20/26	2244	2.5.18
Mulsanne 4dr saloon ★★★★☆												
6.75 V8	184	5.7	13.7	4.8	2.8*	2.6	505	752	44.8	18/21	2745	21.9.11
Bentayga 5dr SUV ★★★★★												
W12	187	4.9	11.6	4.4	8.7	3.0	600	664	48.2	20/25	2440	18.5.16
BMW												
1 Series 5dr hatch ★★★★☆												
118i M Sport	132	8.2	24.2	7.9	13.9	2.75	138	162	–	37/53	1431	30.10.19
2 Series 3dr coupé/convertible ★★★★½												
220d C'vble	140	8.5	24.7	8.4	9.0	2.1	187	295	34.5	50/53	1610	1.4.15
M2	155	4.4	10.3	3.6	6.2	2.6	365	343	33.7	31/37	1595	15.6.16
2 Series Active Tourer 5dr MPV ★★★★☆												
218d Luxury	129	8.9	26.5	8.7	12.1	3.0	148	243	40.4	42/56	1450	24.12.14
3 Series 4dr saloon/5dr estate/5dr hatch ★★★★½												
320d M Sport	149	6.9	19.8	6.8	13.2	2.54	188	295	43.0	47/63	1639	15.5.19
330d xDrv M Spt	155	5.5	14.5	5.2	12.7	3.31	262	428	48.9	42/53	1922	15.1.20
4 Series 2dr coupé ★★★★☆												
435i M Sport	155	5.5	13.2	5.2	6.3	2.7	302	295	28.2	28/37	1585	18.9.13
M4	155	4.1	8.8	3.2	6.1	2.4	425	406	34.0	29/36	1585	9.7.14
5 Series 4dr saloon/5dr estate ★★★★½												
520d M Sport	146	7.4	21.3	7.4	14.3	2.7	188	295	42.2	40/52	1635	31.5.17
M5	155	3.3	7.5	2.7	8.9	3.1	591	553	41.1	22/28	1855	18.4.18
6 Series GT 5dr hatch ★★★½☆												
630d xDrv M Spt	155	5.9	15.7	5.4	7.6	2.8	261	457	50.2	40/54	1880	8.11.17
7 Series 4dr saloon ★★★★☆												
730Ld	153	6.4	17.1	6.0	8.2	3.1	261	457	50.2	40/49	1795	11.11.15
8 Series 2dr coupé/convertible ★★★½☆												
840d xDrive	155	5.0	12.8	4.6	8.6	3.05	315	501	46.5	40/49	1901	16.1.19
M8 Competition	155	3.3	7.4	2.7	8.2	2.71	617	553	40.8	19/32	2020	5.2.20
i3 5dr hatch ★★★★☆												
1.3S Range Ext	99	7.7	–	6.6	4.0*	3.0	181	199	–	2.6/34†	1385	21.2.18
i8 2dr coupé ★★★★½												
i8	155	4.5	10.6	3.7	3.3	2.8	357	420	33.3	50/40	1560	17.9.14
X1 5dr SUV ★★★★☆												
xDrive20d xLine	136	8.2	24.2	8.0	11.8	2.8	187	295	35.1	43/49	1625	14.10.15
X2 5dr SUV ★★★½☆												
M35i	155	5.0	12.7	4.5	11.1	2.74	302	332	37.4	31/42	1668	25.9.19
X3 5dr SUV ★★★★☆												
xDrive20d M Spt	132	8.3	26.6	8.6	17.5	3.3	188	295	41.2	37/49	1825	17.1.18
X4 5dr SUV ★★★☆☆												
M Competition	155	4.0	9.1	3.3	20.1	2.65	503	443	43.3	23/29	2028	13.11.19
X5 5dr SUV ★★★★☆												
xDrive30d M Spt	143	6.6	18.9	6.6	15.1	3.36	261	457	47.1	35/43	2279	2.1.19
M	155	4.2	9.8	3.5	10.2	2.8	567	553	42.3	21/26	2350	13.5.15
CATERHAM												
Seven 2dr roadster ★★★★☆												
620S	145	3.8	9.2	3.2	5.7	2.7	310	219	21.2	25/29	610	9.3.16
CHEVROLET												
Corvette 2dr coupé ★★★★☆												
Stingray	181	4.4	9.4	3.3	11.7	2.3	460	465	48.4	22/33	1539	8.10.14
CITROEN												
C3 5dr hatch ★★★½☆												
P'tech 110 Flair	117	9.6	36.6	9.4	10.5	2.6	109	151	27.0	47/62	1050	28.12.16
C3 Aircross 5dr hatch ★★★½☆												
P'tech 110 Flair	115	11.5	36.4	10.7	12.3	3.5	109	151	27.5	35/39	1159	7.3.18
C4 Cactus 5dr hatch ★★★☆☆												
1.6 BlueHDi 100	114	11.8	41.2	11.7	7.2	2.9	99	187	36.1	47/62	1225	16.7.14
C5 Aircross 5dr SUV ★★★½☆												
BlueHDi 180	131	9.0	25.6	8.5	–	2.83	174	295	40.1	37/48	1540	13.2.19
CUPRA												
Ateca 5dr SUV ★★★½☆												
2.0 TSI 4Drive	153	4.9	12.3	4.4	9.4	3.03	296	295	33.8	29/37	1615	23.1.19
DACIA												
Sandero 5dr hatch ★★★☆☆												
1.2 75 Access	97	15.3	–	17.6	23.0	3.0	74	79	20.3	32/38	941	27.2.13
Duster 5dr hatch ★★★★☆												
SCe 115 Comfort	107	13.1	–	12.5	23.9	2.9	113	115	24.0	37/42	1179	22.8.18
DALLARA												
Stradale Odr roadster ★★★★½												
Stradale	165	3.7	9.2	3.4	3.1	2.39	395	369	26.4	26/30	987	16.10.19
DS												
3 5dr hatch ★★★½☆												
BlueHDi 120	118	9.9	32.2	9.4	11.1	3.1	118	210	36.4	59/67	1150	23.3.16
3 Crossback 5dr SUV ★★★☆☆												
Puretech 155	129	8.8	24.6	8.3	14.9	2.90	153	177	32.7	41/49	1205	10.7.19
7 Crossback 5dr SUV ★★★½☆												
Puretech 225	141	8.6	20.2	7.0	15.1	2.9	221	221	34.0	35/45	1425	19.9.18
FERRARI												
488 GTB 2dr coupé ★★★★★												
488 GTB	205	3.0	5.9	2.0	3.7	2.43	661	561	28.9	–/–	1525	25.5.16
488 Pista	211	2.8	5.6	2.0	4.8	2.34	710	568	28.9	17/26	1465	7.8.19
812 Superfast 2dr coupé ★★★★☆												
F12 Berlinetta	211	3.1	6.2	2.2	4.9	2.6	789	530	30.0	–/24	1630	25.7.18
FIAT												
Panda 5dr hatch ★★★★½												
4x4 Twinair	103	14.6	–	15.8	16.0	3.0	84	107	20.8	37/44	1050	17.4.13
500 3dr hatch ★★★★☆												
Abarth 595	130	7.5	20.1	6.4	7.0	2.8	158	170	23.9	34/39	1035	26.2.14
Tipo 5dr hatch ★★½☆☆												
1.6 M'jet Lounge	124	9.6	31.6	9.8	8.7	2.9	118	236	35.0	49/62	1295	2.11.16
Abarth 124 Spider 2dr roadster ★★★★☆												
124 Spider	144	6.8	18.6	6.5	6.5	2.8	168	184	25.2	35/45	1060	22.3.17
FORD												
Fiesta 3/5dr hatch ★★★★☆												
1.0T Ecoboost	122	9.6	28.1	9.6	13.2	3.2	123	125	29.3	42/52	1147	9.8.17
Fiesta ST 3/5dr hatch ★★★★½												
ST-31.5 T Ecb'st	144	6.6	16.2	5.7	6.4	2.7	197	214	26.0	38/48	1187	15.8.18
Focus 5dr hatch ★★★★½												
1.5 Ecob't 182PS	138	8.9	22.8	7.8	10.0	2.35	180	177	26.9	30/44	1417	20.2.19
ST	155	6.1	14.1	4.9	6.1	2.70	273	310	27.2	32/41	1433	11.9.19
RS	165	5.3	13.9	5.3	6.9	3.5	345	325	27.3	28/37	1599	4.5.16
S-Max 5dr MPV ★★★★☆												
2.0 TDCi T'ium	123	10.5	32.0	10.4	13.9	2.5	148	258	39.5	44/46	1725	26.8.15
Mondeo 4dr saloon/5dr/estate ★★★★☆												
2.0 TDCi	130	10.0	28.8	9.4	12.7	3.1	148	258	38	53/56	1597	14.1.15
Mustang 2dr coupé ★★★★☆												
5.0 V8 GT F'back	155	5.2	11.6	4.2	9.4	2.7	410	391	35.1	19/25	1720	24.2.16
Bullitt	155	5.2	11.2	4.1	10.7	2.7	453	390	37.4	21/33	1782	5.12.18
Ecosport 5dr SUV ★★½☆☆												
1.5 TDCi	99	14.3	–	15.2	14.4	2.7	89	151	28	39/48	1384	3.9.14
Kuga 5dr SUV ★★★★☆												
2.0 TDCi	122	10.9	44.2	11.8	7.4	2.6	161	251	31.6	34/39	1707	13.3.13
Ranger 4dr pick-up ★★★★☆												
Raptor	106	10.5	37.7	10.5	–	3.46	210	367	41.1	24/33	2516	28.8.19
HONDA												
Civic 5dr hatch ★★★★☆												
1.5 i-VTEC Turbo	126	7.8	19.3	7.0	8.7	2.7	180	177	26.6	39/49	1357	19.4.17
2.0 Type R GT	169	5.7	12.5	4.4	6.1	2.8	316	295	25.4	29/43	1380	25.10.17
Clarity FCV ★★★★☆												
Clarity FCV	104	9.0	29.2	8.3	5.3*	2.9	174	221	na	51/72**	1872	12.7.17
CR-V 5dr SUV ★★★½☆												
1.5T EX CVT AWD	124	9.2	26.1	8.4	5.2*	3.3	190	179	39.5	32/38	1669	7.11.18
NSX 2dr coupé ★★★★½												
NSX	191	3.3	7.3	2.6	4.3	2.7	573	476	35.8	25/32	1725	5.10.16
HYUNDAI												
i10 5dr hatch ★★★½☆												
1.0 SE	96	14.7	–	16.2	19.9	2.9	65	70	20.0	44/51	925	29.1.14
i20 5dr hatch ★★★★☆												
1.4 SE	114	12.2	42.4	12.1	17.3	3.0	99	99	21.8	43/54	1060	7.1.14
i30 5dr hatch/estate ★★★½☆												
i30 N	155	6.4	14.8	5.6	6.1	3.1	271	260	27.4	31/43	1478	27.12.17
1.4 Premium SE	129	9.5	28.9	9.7	10.9	2.7	138	178	28.1	39/49	1423	13.9.17
Kona Electric 5dr SUV ★★★★☆												
64kWh P'm SE	104	6.7	17.4	5.8	3.5*	3.1	201	291	–	3.7/4.0†	1734	31.10.18
Santa Fe 5dr SUV ★★★½☆												
2.2 CRDi P'm SE	127	9.3	26.4	9.8	–	2.78	197	325	40.2	38/51	2003	6.3.19
Nexo 5dr SUV ★★★½☆												
Nexo	111	9.6	38.5	9.7	6.1*	2.88	161	291	–	42/60**	1852	12.6.19
JAGUAR												
F-Type 2dr convertible/3dr coupé ★★★★½												
V8 S Convertible	186	4.0	9.4	3.4	8.0	2.8	488	460	46.8	19/29	1655	12.6.13
V6 S Coupé	171	4.9	12.1	4.2	12.7	2.7	375	339	36.2	24/33	1594	11.6.14
2.0 Coupé R-Dy	155	5.8	14.7	5.1	9.5	2.8	296	295	33.2	31/44	1640	22.11.17
XF 4dr saloon/5dr estate ★★★½☆												
R-Sport 2.0	136	9.4	26.1	9.0	16.1	2.9	178	317	44.1	47/56	1595	2.12.15
S'brake 300 R-S	155	6.6	16.8	6.2	10.6	2.81	296	295	44.1	24/37	1727	17.4.19
XE 4dr saloon ★★★★½												
R-Sport 2.0	147	7.6	19.0	6.9	13.3	2.7	197	206	33.8	30/49	1530	1.7.15
XJ 4dr saloon ★★★★☆												
3.0d LWB	155	6.3	16.5	6.6	3.6*	2.7	271	443	43.5	28/36	1960	9.6.10
E-Pace 5dr SUV ★★★½☆												
D180 AWD SE	127	9.9	30.9	10.5	14	3.6	178	317	45.8	36/49	1843	11.4.18
F-Pace 5dr SUV ★★★★☆												
2.0d AWD	129	9.2	30.9	9.7	7.4	–	178	317	41.3	37/40	1775	11.5.16
SVR	176	4.1	9.3	3.5	10.4	2.69	542	502	41.6	18/29	2070	24.7.19
I-Pace 5dr SUV ★★★★½												
EV400 S	124	4.5	11.0	3.5	2.0	2.8	394	512	–	1.8/2.4†	2133	12.9.18
JEEP												
Compass 5dr 4x4 ★★★☆☆												
2.0 M'jet 4x4 L'd	118	11.0	39.0	11.4	10.9	2.8	138	258	34.2	38/45	1540	3.10.18
Renegade 5dr 4x4 ★★★½☆												
2.0 M'jet 4x4 L'd	113	10.8	37.6	11.2	10.0	3.5	138	258	34.0	41/53	1502	28.10.15
Wrangler 5dr 4x4 ★★★★☆												
2.2 M'Jet-II Ov'd	112	9.0	29.9	9.1	–	2.37	197	332	38.3	29/38	2044	10.4.19
KIA												
Stinger 4dr saloon ★★★½☆												
2.0 T-GDI GT-LS	149	7.4	18.2	6.4	10.9	2.9	244	260	36.7	32/43	1717	25.4.18
Rio 5dr hatch ★★★½☆												
1.0 T-GDI 3 Eco	115	10.0	37.0	10.5	12.3	3.2	99	127	27.1	40/50	1228	1.3.17
Ceed 5dr hatch ★★★½☆												
1.6 CRDi 115 2	119	9.9	30.8	9.6	15.3	2.9	113	207	41.4	50/70	1388	29.8.18
Proceed 5dr shooting brake ★★★½☆												
1.4 T-GDi	127	9.5	28.1	8.9	13.2	2.87	138	179	24.1	34/43	1475	27.2.19
Xceed 5dr crossover ★★★½☆												
1.4 T-GDi	124	9.3	28.8	8.7	12.3	3.55	138	179	31.7	35/47	1452	20.11.19
Niro 5dr SUV ★★★½☆												
1.6 GDI DCT 2	101	9.7	30.0	9.5	12.8	3.5	139	108/125	31.9	49/50	1500	31.8.16
e-Niro First Ed'n	104	7.2	19.0	–	3.7*	2.70	201	291	–	3.5/3.6†	1776	1.5.19
Sportage 5dr SUV ★★★½☆												
1.7 CRDi ISG 2	109	12.1	46.4	13.1	16.8	3.3	114	207	34.4	50/51	1500	2.3.16
Sorento 5dr 4x4 ★★★½☆												
2.2 CRDi KX-4	128	9.3	28.6	9.4	5.7*	–	197	325	35.2	35/39	1953	8.4.15
LAMBORGHINI												
Huracán 2dr coupé ★★★★½												
Performante	201	2.9	5.9	2.0	4.9	3.0	630	442	24.5	17/22	1382	11.10.17
Aventador 2dr coupé ★★★★☆												
SVJ	217	2.9	6.1	2.2	5.0	2.65	759	531	33.7	12/21	1770	19.6.19
Urus 5dr SUV ★★★★☆												
Urus	190	3.3	7.8	2.8	–	2.70	641	627	43.0	19/29	2285	3.7.19
LAND ROVER												
Discovery Sport 5dr SUV ★★★★☆												
D180 AWD SE	125	10.3	35.2	10.5	10.7	3.54	177	317	39.8	31/48	2145	8.1.20
Range Rover 5dr SUV ★★★★½												
4.4 SDV8	135	7.0	19.0	6.7	3.8*	2.9	334	516	41.8	25/35	2625	12.12.12
Range Rover Velar 5dr SUV ★★★½☆												
D240 HSE	135	9.3	27.4	9.0	15.7	3.8	237	369	41.8	33/48	2089	30.8.17
Range Rover Sport 5dr SUV ★★★★½												
3.0 TDV6	130	7.8	22.5	7.5	12.2	3.1	255	442	43.1	33/42	2115	2.10.13
SVR	162	4.4	10.3	3.8	12.6	2.6	542	502	41.8	22/19	2335	15.4.15

ROAD TEST RESULTS

LEXUS

Make and model	Top speed	0-60mph	0-100mph	30-70mph	50-70mph	Braking 60-0mph	Power (bhp)	Torque (lb ft)	Mph/1000rpm	Mpg or equivalent; test average/ touring	Weight (kg)	TEST DATE
LC 2dr coupé ★★★★☆												
LC500 Sport+	168	5.2	11.3	4.2	12.0	3.1	471	398	60.6	27/39	1970	18.10.17
NX 5dr SUV ★★★☆☆												
300h	112	9.7	30.4	9.1	5.6*	2.7	194	na	–	32/38	1905	1.10.14
RC F 2dr coupé ★★★☆☆												
RC F	168	4.8	10.7	3.9	12.9	2.9	471	391	39	24/28	1765	18.2.15
ES 4dr saloon ★★★½☆												
300h Takumi	112	8.7	21.8	7.6	4.6*	2.91	215	na	–	42/49	1742	6.2.19
LS 4dr saloon ★★★☆☆												
500h Prem AWD	155	5.9	15.4	5.3	12.4	2.8	295	258	36.9	30/42	2380	6.6.18

LOTUS

Make and model	Top speed	0-60mph	0-100mph	30-70mph	50-70mph	Braking 60-0mph	Power (bhp)	Torque (lb ft)	Mph/1000rpm	Mpg or equivalent; test average/ touring	Weight (kg)	TEST DATE
Elise 2dr roadster ★★★½☆												
Cup 250	154	4.7	11.9	4.5	7.2	2.5	243	184	24.7	27/32	920	29.6.16
Evora 2dr coupé ★★★★☆												
Evora S 2+0	172	4.5	11.3	4.0	6.8	2.4	345	295	34.8	21/26	1430	30.3.11
Exige S 2dr coupé ★★★★½												
Exige S	170	4.1	9.6	3.7	5.5	2.5	345	295	27	21/30	1176	3.4.13

MASERATI

Make and model	Top speed	0-60mph	0-100mph	30-70mph	50-70mph	Braking 60-0mph	Power (bhp)	Torque (lb ft)	Mph/1000rpm	Mpg or equivalent; test average/ touring	Weight (kg)	TEST DATE
Ghibli 4dr saloon ★★★½☆												
Diesel	155	6.5	17.2	6.0	5.1	2.7	271	443	43.3	31/40	1835	12.3.14
Levante 5dr SUV ★★★☆☆												
Diesel	143	6.8	19.9	6.9	4.3	3.4	271	443	46	26/42	2205	30.11.16
S Granlusso	164	5.1	12.7	4.5	–	2.73	424	478	39.8	16/24	2232	8.5.19

MAZDA

Make and model	Top speed	0-60mph	0-100mph	30-70mph	50-70mph	Braking 60-0mph	Power (bhp)	Torque (lb ft)	Mph/1000rpm	Mpg or equivalent; test average/ touring	Weight (kg)	TEST DATE
2 5dr hatch ★★★★☆												
1.5 Sky'v-G SE	114	10.4	38.0	7.0	20.2	3.1	89	109	27.9	51/55	1050	22.4.15
3 4dr saloon/5dr hatch ★★★★☆												
2.0 Skyactiv-X	134	9.1	24.7	9.1	14.7	2.89	177	165	29.1	40/57	1425	6.11.19
MX-5 2dr roadster ★★★★½												
1.5 SE-L Nav	127	8.4	24.8	7.9	14.7	3.3	129	111	24.5	46/49	1050	2.9.15
CX-3 5dr SUV ★★★½☆												
1.5D SE-L Nav	110	10.3	34.7	10.3	10.3	–	104	199	34.8	59/60	1275	22.7.15
CX-5 5dr SUV ★★★★☆												
2.2D Sport Nav	127	9.4	26.3	9.1	10.4	3.0	148	280	37.0	43/53	1594	28.6.17

McLAREN

Make and model	Top speed	0-60mph	0-100mph	30-70mph	50-70mph	Braking 60-0mph	Power (bhp)	Torque (lb ft)	Mph/1000rpm	Mpg or equivalent; test average/ touring	Weight (kg)	TEST DATE
570S 2dr coupé ★★★★★												
3.8 V8	204	3.1	6.4	2.2	10.2	2.6	562	443	36.5	23/37	1440	30.3.16
600LT Spider 2dr convertible ★★★★½												
3.8 V8	201	2.9	6.1	2.1	–	2.52	592	457	36.5	17/30	1404	22.5.19
720S 2dr coupé ★★★★★												
4.0 V8	212	2.9	5.6	2.0	7.7	2.4	710	568	35.4	19/24	1420	24.5.17
Senna 2dr coupé ★★★★★												
4.0 V8	208	3.1	5.5	1.9	8.0	2.4	789	590	35.7	16/25	1345	10.10.18
P1 2dr coupé ★★★★★												
P1	217	2.8	5.2	2.2	6.0	2.3	903	664	36.0	19.6/–	–	7.5.14

MERCEDES-AMG

Make and model	Top speed	0-60mph	0-100mph	30-70mph	50-70mph	Braking 60-0mph	Power (bhp)	Torque (lb ft)	Mph/1000rpm	Mpg or equivalent; test average/ touring	Weight (kg)	TEST DATE
C63 4dr saloon ★★★★½												
C63	155	4.4	9.7	3.4	7.5	2.7	469	479	38.1	19/25	1715	3.6.15
C63 S C'vertible	155	4.6	10.2	3.4	7.1	2.7	503	516	35.6	21/27	1850	8.2.17
C63 S Coupé	180	4.3	9.2	3.2	10.7	2.69	503	516	43.2	26/34	1745	24.4.19
CLS53 4dr saloon ★★★★☆												
CLS53 4Matic+	155	4.3	10.3	3.7	9.1	2.7	429	384	43.8	31/39	1980	17.10.18
GT 2dr coupé ★★★★☆												
S	193	3.6	7.8	2.8	5.5	2.5	503	479	34.7	20/29	1715	29.7.15
R	198	3.6	7.3	2.7	4.6	2.4	577	516	30.7	19/23	1555	10.5.17
GT 4-Door Coupé 4dr coupé ★★★★½												
GT63 4Matic+	193	3.3	7.7	2.7	10.7	2.8	577	590	42.6	22/30	2135	13.3.19
SLC 2dr convertible ★★★½☆												
SLC43	155	5.5	12.3	4.2	12.7	3.0	362	384	40.4	27/33	1595	6.7.16
GLC 5dr SUV ★★★½☆												
GLC63 S 4Mtic+	155	3.7	8.9	3.2	15.4	2.8	503	516	43.4	19/26	2020	13.6.18

MERCEDES-BENZ

Make and model	Top speed	0-60mph	0-100mph	30-70mph	50-70mph	Braking 60-0mph	Power (bhp)	Torque (lb ft)	Mph/1000rpm	Mpg or equivalent; test average/ touring	Weight (kg)	TEST DATE
A-Class 5dr hatch ★★★★☆												
A200 Sport	139	8.7	22.4	7.9	–	3.2	161	184	33.6	39/57	1379	4.7.18
B-Class 5dr MPV ★★★★☆												
B180 Sport	132	8.4	23.5	8.3	–	2.73	134	148	33.6	33/51	1405	3.4.19
CLA 4dr saloon ★★★☆☆												
CLA 250	155	6.8	17.1	6.1	11.5	2.88	221	258	–	34/49	1555	21.8.19
C-Class 4dr saloon/5dr estate ★★★★☆												
C220 Bluetec	145	8.1	22.9	8.1	11.7	2.8	168	295	42.4	41/51	1700	23.7.14
E-Class 4dr saloon/5dr estate/2dr convertible/2dr coupé ★★★★☆												
E400 Coupé	155	5.6	13.4	4.9	14.8	2.9	328	354	46.7	30/39	1845	14.6.17
S-Class 4dr saloon/2dr coupé ★★★★★												
S350 Bluetec	155	7.3	19.0	6.8	3.9*	2.7	255	457	45.6	34/44	1975	16.10.13
S63 AMG Coupé	155	4.5	9.6	3.4	6.8	2.7	577	664	42.8	22/25	2070	3.12.14
GLA 5dr SUV ★★★½☆												
GLA220 CDI SE	134	8.1	23.8	7.8	4.7	2.65	168	258	36.4	40/48	1535	14.5.14
GLC 5dr SUV ★★★★☆												
GLC250d	143	7.8	23.5	7.8	15.7	3.2	201	369	46.9	39/43	1845	10.2.16
G-Class 5dr SUV ★★★★☆												
G350d AMG Line	124	7.5	22.4	7.2	15.0	3.40	282	443	46.0	25/31	2451	17.7.19
GLS 5dr SUV ★★★½☆												
GLS 400d 4Matic	148	6.5	17.5	6.0	10.7	3.00	326	516	46.2	30/38	2634	12.2.20
X-Class 4dr pick-up ★★★½☆												
X250d 4Matic	109	11.2	38.9	11.6	–	3.2	187	332	31.3	27/36	2159	20.6.18
SL 2dr convertible ★★★★☆												
SL500	155	4.3	9.9	3.6	6.5	2.7	429	516	39.6	10/24	1815	8.8.12

MG

Make and model	Top speed	0-60mph	0-100mph	30-70mph	50-70mph	Braking 60-0mph	Power (bhp)	Torque (lb ft)	Mph/1000rpm	Mpg or equivalent; test average/ touring	Weight (kg)	TEST DATE
3 5dr hatch ★★★½☆												
1.5 3Form Sp't	108	11.4	41.5	11.6	19.6	2.8	105	101	22.2	37/41	1150	25.12.13
ZS 5dr SUV ★★★☆☆												
EV Exclusive	87	8.9	–	8.0	5.2*	3.60	141	260	–	2.7/3.1†	1556	4.12.19

MINI

Make and model	Top speed	0-60mph	0-100mph	30-70mph	50-70mph	Braking 60-0mph	Power (bhp)	Torque (lb ft)	Mph/1000rpm	Mpg or equivalent; test average/ touring	Weight (kg)	TEST DATE
Mini 3dr hatch ★★★★½												
Cooper S	146	6.9	17.1	5.9	6.7	2.5	189	221	26.4	35/54	1235	2.4.14
C'per S Wks 210	146	7.2	16.4	6.0	6.5	3.0	207	221	26.5	31/47	1235	6.12.17
Clubman 5dr hatch ★★★½☆												
Cooper D	132	8.6	25.9	8.2	10.0	2.9	148	243	34.9	51/52	1320	25.11.15
Convertible 2dr convertible ★★★★½												
Cooper	129	9.2	25.4	8.8	12.4	2.7	134	162	31.0	46/53	1280	6.4.16
Countryman 5dr hatch ★★★½☆												
Cooper D	129	9.0	26.4	8.4	11.5	2.8	148	243	36.2	42/48	1480	22.2.17
Plug-in Hybrid	123	6.7	24.4	6.2	5.5	3.5	221	284	30.1	42/50	1735	26.7.17

MITSUBISHI

Make and model	Top speed	0-60mph	0-100mph	30-70mph	50-70mph	Braking 60-0mph	Power (bhp)	Torque (lb ft)	Mph/1000rpm	Mpg or equivalent; test average/ touring	Weight (kg)	TEST DATE
Eclipse Cross 5dr SUV ★★★☆☆												
1.5 First Ed 2WD	127	9.0	26.5	8.3	13.8	3.0	161	184	30.9	34/45	1455	14.3.18
Outlander 5dr SUV ★★★½☆												
PHEV GX4hs	106	10.0	30.5	9.5	6.2	3.0	200	245	–	44/38	1810	16.4.14

MORGAN

Make and model	Top speed	0-60mph	0-100mph	30-70mph	50-70mph	Braking 60-0mph	Power (bhp)	Torque (lb ft)	Mph/1000rpm	Mpg or equivalent; test average/ touring	Weight (kg)	TEST DATE
3 Wheeler 2dr roadster ★★★★★												
3 Wheeler	115	8.0	29.9	7.7	5.1	3.56	80	103	21.3	30/–	520	6.6.12

NISSAN

Make and model	Top speed	0-60mph	0-100mph	30-70mph	50-70mph	Braking 60-0mph	Power (bhp)	Torque (lb ft)	Mph/1000rpm	Mpg or equivalent; test average/ touring	Weight (kg)	TEST DATE
Micra 5dr hatch ★★★★☆												
0.9 N-Connecta	109	12.1	44.7	11.7	15.6	2.8	89	103	24.3	45/57	1068	26.4.17
DIG-T 117 N-Sport	121	10.2	28.8	9.4	16.5	3.2	115	148	31.2	33/55	1105	27.3.19
Juke 5dr SUV ★★★½☆												
1.0 DIG-T 117	112	11.9	44.8	11.8	16.3	3.10	115	148	28.2	38/46	1256	29.1.20
Qashqai 5dr SUV ★★★★½												
1.5 dCi 2WD	113	10.8	39.2	11.1	12.9	2.9	109	192	35.0	49/56	1365	19.2.14
X-Trail 5dr SUV ★★★½☆												
1.6 dCi 2WD	117	11.2	39.7	11.7	11.2	3.0	128	236	32.8	42/48	1550	13.8.14
GT-R 2dr coupé ★★★★½												
Recaro	196	3.4	7.8	2.7	5.3	2.7	562	470	28.0	22/31	1752	16.11.16

NOBLE

Make and model	Top speed	0-60mph	0-100mph	30-70mph	50-70mph	Braking 60-0mph	Power (bhp)	Torque (lb ft)	Mph/1000rpm	Mpg or equivalent; test average/ touring	Weight (kg)	TEST DATE
M600 2dr coupé ★★★★½												
M600	225	3.5	6.8	2.5	4.7	2.45	650	604	29.9	18/25	1305	14.10.09

PEUGEOT

Make and model	Top speed	0-60mph	0-100mph	30-70mph	50-70mph	Braking 60-0mph	Power (bhp)	Torque (lb ft)	Mph/1000rpm	Mpg or equivalent; test average/ touring	Weight (kg)	TEST DATE
208 3/5dr hatch ★★★☆☆												
GTi 30th	143	6.5	16.1	5.8	6.7	2.9	205	221	25.6	41/42	1160	11.2.15
308 3/5dr hatch ★★★★☆												
1.6 e-HDi 115	118	10.1	32.6	10.4	13.9	3.0	114	199	38.5	48/59	1395	15.1.14
508 4dr saloon ★★★★☆												
GT Bl'HDi 180	146	8.8	23.4	8.5	10.8	2.6	174	295	43.9	35/52	1535	24.10.18
2008 5dr SUV ★★★½☆												
1.6 e-HDi	117	10.7	37.8	11.5	11.8	3.2	114	199	32.7	49/59	1180	19.6.13
3008 5dr SUV ★★★½☆												
1.6 Bl'HDi GT L'e	117	12.0	44.3	12.1	13.2	3.2	118	221	34.6	42/53	1300	18.1.17
5008 5dr MPV ★★★½☆												
2.0 Bl'HDi GT L'e	129	10.8	28.8	9.7	11.5	2.7	148	273	37.6	51/60	1490	1.11.17

PORSCHE

Make and model	Top speed	0-60mph	0-100mph	30-70mph	50-70mph	Braking 60-0mph	Power (bhp)	Torque (lb ft)	Mph/1000rpm	Mpg or equivalent; test average/ touring	Weight (kg)	TEST DATE
718 2dr coupé/roadster ★★★★½												
Boxster	171	5.4	12.2	4.3	5.2	2.5	296	280	25.8	26/36	1335	8.6.16
Cayman S	177	4.8	10.5	3.9	4.8	2.5	345	310	25.8	28/29	1430	10.8.16
Cayman GTS	180	4.8	10.2	3.5	4.7	2.5	361	310	25.8	28/39	1375	9.5.18
911 GT2 2dr coupé ★★★★☆												
GT2 RS	211	3.0	6.1	2.2	5.6	2.6	691	553	32.1	19/28	1470	18.7.18
911 2dr coupé ★★★★½												
Carrera S	191	3.4	7.7	2.8	14.3	–	444	391	44.1	23/39	1515	29.5.19
918 Spyder 2dr coupé ★★★★★												
4.6 V8	214	2.6	5.3	1.9	2.2	2.3	874	944	41.2	28/44	1740	22.10.14
Panamera 4dr saloon ★★★★★												
4S Diesel	177	4.1	10.3	3.8	–	3.0	416	627	50.7	32/43	2050	1.2.17
Macan 5dr SUV ★★★★½												
Turbo	165	4.7	11.8	4.3	7.9	2.4	394	406	35.7	22/31	2000	4.6.14
Cayenne 5dr SUV ★★★★☆												
Turbo	177	3.9	9.3	3.3	5.3	2.8	542	568	44.7	21/31	2250	5.9.18

RENAULT

Make and model	Top speed	0-60mph	0-100mph	30-70mph	50-70mph	Braking 60-0mph	Power (bhp)	Torque (lb ft)	Mph/1000rpm	Mpg or equivalent; test average/ touring	Weight (kg)	TEST DATE
Twingo 5dr hatch ★★★½☆												
Dynamique	94	17.6	–	19.1	29.4	2.9	69	67	20.8	42/52	865	29.10.14
Zoe 5dr hatch ★★★½☆												
Dynamique	84	12.3	–	13.9	9.1	2.9	87	162	7.8	4.0/3.4†	1468	31.7.13
Clio 5dr hatch ★★★★½												
TCe 100 Iconic	116	11.6	36.0	10.9	16.9	3.36	99	118	26.5	46/57	1138	27.11.19
Mégane 5dr hatch ★★★☆☆												
1.5 dCi Dyn. S Nav	116	11.1	35.2	11.1	13.2	2.8	108	192	33.9	47.2	1387	17.8.16
RS Trophy-R	163	5.6	12.8	4.6	6.8	2.67	296	295	27.1	26/38	1280	23.10.19
Grand Scenic 5dr MPV ★★★½☆												
dCi 130 Dyn. S Nav	118	11.4	35.8	11.3	10.2	3.4	129	236	32.1	47/61	1601	25.1.17
Kadjar 5dr SUV ★★★★☆												
dCi 115 Dyn. S Nav	113	14.5	–	14.6	17.2	2.3	108	192	35.0	52/69	1380	21.10.15
Koleos 5dr SUV ★★★☆☆												
dCi 175 4WD Sig.	126	9.8	31.3	10.1	14.3	2.9	175	280	–	34/38	1747	20.8.17

ROLLS-ROYCE

Make and model	Top speed	0-60mph	0-100mph	30-70mph	50-70mph	Braking 60-0mph	Power (bhp)	Torque (lb ft)	Mph/1000rpm	Mpg or equivalent; test average/ touring	Weight (kg)	TEST DATE
Phantom 4dr saloon ★★★★★												
Phantom	155	5.5	11.8	4.4	2.5*	2.8	563	664	51.2	8/28	2560	4.4.18
Ghost 4dr saloon ★★★★☆												
Ghost	155	4.9	10.6	3.9	2.3*	2.6	563	575	46.0	18/23	2450	7.7.10
Wraith 2dr coupé ★★★★½												
Wraith	155	4.6	10.0	4.5	2.1*	2.9	624	590	45.9	15/27	2435	21.5.14
Dawn 2dr convertible ★★★★☆												
Dawn	155	5.2	11.6	4.2	2.4*	2.9	563	575	47.7	19/25	2560	1.6.16
Cullinan 5dr SUV ★★★★☆												
Black Badge	155	4.9	11.3	4.2	2.4*	3.07	591	664	–	19/24	2739	19.2.20

SEAT

Make and model	Top speed	0-60mph	0-100mph	30-70mph	50-70mph	Braking 60-0mph	Power (bhp)	Torque (lb ft)	Mph/1000rpm	Mpg or equivalent; test average/ touring	Weight (kg)	TEST DATE
Ibiza 5dr hatch ★★★★½												
SE Tech'y 1.0 TSI	113	10.0	34.1	10.0	10.1	3.0	94	129	27.2	45/56	1047	19.7.17
Leon 3/5dr hatch ★★★★☆												
Cupra SC 280	155	5.9	13.6	4.4	7.1	2.7	276	258	27.2	28/36	1441	26.3.14
Arona 5dr SUV ★★★★☆												
SE Tech'y 1.0 TSI	107	10.5	–	10.6	11.9	3.1	94	129	26.2	37/41	1165	15.11.17
Ateca 5dr SUV ★★★★½												
1.6 TDI SE	114	10.5	35.6	9.3	14.0	2.9	114	184	36.4	50/62	1300	19.10.16

SMART

Make and model	Top speed	0-60mph	0-100mph	30-70mph	50-70mph	Braking 60-0mph	Power (bhp)	Torque (lb ft)	Mph/1000rpm	Mpg or equivalent; test average/ touring	Weight (kg)	TEST DATE
Forfour Electric Drive 5dr hatch ★★½☆☆												
Prime Premium	81	13.2	–	14.5	10.6	2.8	80	118	–	3.1/3.9†	1200	23.8.17

SKODA

Make and model	Top speed	0-60mph	0-100mph	30-70mph	50-70mph	Braking 60-0mph	Power (bhp)	Torque (lb ft)	Mph/1000rpm	Mpg or equivalent; test average/ touring	Weight (kg)	TEST DATE
Fabia 5dr hatch ★★★★☆												
1.2 TSI 90 SE-L	113	12.6	46	12.5	15.0	3.4	89	118	26.1	45/49	1109	21.1.15
Scala 5dr hatch ★★★½☆												
1.5 TSI 150 DSG	136	7.9	21.5	7.3	11.8	2.78	148	184	33.5	42/53	1200	31.7.19
Octavia 4dr saloon/5dr estate ★★★★☆												
vRS 245 Estate	155	6.9	16.2	5.8	7.3	2.9	242	273	29.8	33/39	1392	16.8.17
Superb 5dr hatch/estate ★★★★½												
2.0 TDI SE	135	8.8	24.9	8.2	11.2	2.8	148	251	37.2	47/54	1505	9.9.15
Karoq 5dr SUV ★★★½☆												
2.0 TDI 150 Scout	122	8.9	28.7	9.6	12.8	2.86	148	251	36.1	38/47	1629	30.1.19
Kodiaq 5dr SUV ★★★★☆												
2.0 TDI Edition	121	9.5	34.7	10.1	12.2	2.8	148	251	33.5	37/48	1751	23.11.16

SSANGYONG

Make and model	Top speed	0-60mph	0-100mph	30-70mph	50-70mph	Braking 60-0mph	Power (bhp)	Torque (lb ft)	Mph/1000rpm	Mpg or equivalent; test average/ touring	Weight (kg)	TEST DATE
Tivoli XLV ★★★☆☆												
ELX auto	107	12.0	44.5	12.6	7.9	3.1	113	221	33.2	45/58	1425	14.9.16

SUBARU

Make and model	Top speed	0-60mph	0-100mph	30-70mph	50-70mph	Braking 60-0mph	Power (bhp)	Torque (lb ft)	Mph/1000rpm	Mpg or equivalent; test average/ touring	Weight (kg)	TEST DATE
XV 5dr SUV ★★★☆☆												
2.0i SE L'tronic	120	10.1	27.7	9.0	27.0	3.4	154	145	41.5	31/39	1451	28.2.18
Levorg 5dr estate ★★★☆☆												
GT 1.6i L'tronic	130	8.4	24.6	7.9	21.0	2.6	168	184	31.9	34/36	1537	13.1.16

SUZUKI

Make and model	Top speed	0-60mph	0-100mph	30-70mph	50-70mph	Braking 60-0mph	Power (bhp)	Torque (lb ft)	Mph/1000rpm	Mpg or equivalent; test average/ touring	Weight (kg)	TEST DATE
Swift 5dr hatch ★★★½☆												
1.0 SZ5	121	10.5	33.0	10.3	11.8	2.9	110	125	26.3	45/56	925	17.5.17
Celerio 5dr hatch ★★★½☆												
1.0 SZ4	96	12.9	–	14.3	25.0	3.0	67	66	22.4	54/57	835	25.3.15
Baleno 5dr hatch ★★★½☆												
1.0T B'jet SZ5	124	9.8	29.5	9.7	11.2	2.9	110	125	26.3	50/55	950	3.8.16
SX4 S-Cross 5dr SUV ★★★½☆												
1.6 DDiS SZ4	111	10.0	32.6	10.1	8.9	2.6	118	236	35.1	57/67	1290	30.10.13
Jimny 3dr SUV ★★★½☆												
1.5 SZ5 Allgrip	90	11.9	–	11.6	15.1	4.4	100	95	19.8	29/35	1112	28.11.18
Vitara 5dr SUV ★★★½☆												
1.6 SZ5	112	9.5	29.8	9.5	15.5	–	118	115	24.3	49/47	1075	29.4.15

TESLA

Make and model	Top speed	0-60mph	0-100mph	30-70mph	50-70mph	Braking 60-0mph	Power (bhp)	Torque (lb ft)	Mph/1000rpm	Mpg or equivalent; test average/ touring	Weight (kg)	TEST DATE
Model 3 4dr saloon ★★★★☆												
St'd Range Plus	140	5.8	14.2	4.7	2.8	2.77	252	277	8.6	3.1/4.0†	1633	4.9.19
Model S 4dr saloon ★★★★½												
P90D	155	5.2	9.1	3.0	1.9	2.9	525	713	8.5	2.4/3.3†	2200	20.4.16
Model X 5dr SUV ★★★★☆												
90D	155	4.7	13.1	2.8	2.5	2.7	416	487	8.5	1.6/2.0†	2508	15.2.17

TOYOTA

Make and model	Top speed	0-60mph	0-100mph	30-70mph	50-70mph	Braking 60-0mph	Power (bhp)	Torque (lb ft)	Mph/1000rpm	Mpg or equivalent; test average/ touring	Weight (kg)	TEST DATE
**Ya

29158

Machine Mart®

WHERE QUALITY COSTS LESS

64 SUPERSTORES NATIONWIDE

Clarke® GARAGES/WORKSHOPS UP TO 24' (7.3M) LONG

FROM ONLY £229.00 EXC.VAT £274.80 INC.VAT

Great for use as a garage, workshop or storage area

● Extra tough, triple-layer, waterproof cover ● Fully UV treated for long-term protection ● Heavy duty, powder coated steel tubing for stability in all weathers ● Ratchet tightening to ensure drum-tight cover ● Includes ground anchoring system

MODEL	SIZE (LxWxH)	EXC.VAT	INC.VAT
CIG81015	4.5 x 3 x 2.4M	£229.00	£274.80
CIG81020*	6.1 x 3 x 2.4M	£279.00	£334.80
CIG81216	4.8 x 3.7 x 2.5M	£279.00	£334.80
CIG81220	6.1 x 3.7 x 2.5M	£349.00	£418.80
CIG81224	7.3 x 3.7 x 2.5M	£419.00	£502.80

* was £346.80 inc.VAT

5 EASY WAYS TO BUY...
SUPERSTORES NATIONWIDE
TELESALES 0115 956 5555
CALL & COLLECT AT STORES TODAY
CLICK & COLLECT OVER 10,000 LOCATIONS
ONLINE www.machinemart.co.uk

NEW CARS A TO Z

For full reviews of every car listed here, visit our website, **autocar.co.uk**

ECONOMY EXPLAINED

Between the various figures produced on the old-style 'NEDC', transitional 'NEDC correlated' and new-style 'WLTP' lab emissions and fuel economy tests, it's become tricky to compare manufacturers' claimed efficiency on the latest new cars. When you see a fuel economy and CO_2 figure reference elsewhere, it's often without explanation.

So, to provide as fair and clear a basis for comparison as possible, you'll only ever read 'WLTP combined' fuel economy and CO_2 figures in Autocar's first drive reviews, features and comparison tests – and on these data pages. Those are the aggregated result of four lab tests carried out across as many different cruising speed ranges – although they're sometimes expressed as a range rather than as one specific figure to show the different results recorded by the heaviest and lightest available examples of the car in question (depending on optional equipment). Not all car makers have published these figures yet, however.

In road tests, you'll also see our own independently produced real-world fuel economy test results for comparison with the lab test claims. We produce an 'average', 'track' and 'touring' figure for each car we test – as often as possible on a brim-to-brim test basis. While 'average' represents the overall economy returned by a new car over a full road test, and 'track' is relevant only to intensive performance testing (the length and conditions of which can vary slightly), 'touring' gives the best guide of the kind of economy you might see from a car at a steady 70mph UK motorway cruise.

We do real-world efficiency and range testing on electric cars, too, expressing the former in terms of miles per kilowatt hour, as EV manufacturers do increasingly widely by convention.

STAR RATINGS EXPLAINED

- ☆☆☆☆☆ Inherently dangerous/unsafe. Tragically, irredeemably flawed.
- ★☆☆☆☆ Appalling. Massively significant failings.
- ★☆☆☆☆ Very poor. Fails to meet any accepted class boundaries.
- ★½☆☆☆ Poor. Within acceptable class boundaries in a few areas. Still not recommendable.
- ★★☆☆☆ Off the pace. Below average in nearly all areas.
- ★★½☆☆ Acceptable. About average in key areas, but disappoints.
- ★★★☆☆ Competent. Above average in some areas, average in others. Outstanding in none.
- ★★★½☆ Good. Competitive in key areas.
- ★★★★☆ Very good. Very competitive in key areas, competitive in secondary respects.
- ★★★★½ Excellent. Near class-leading in key areas and in some ways outstanding.
- ★★★★★ Brilliant, unsurpassed. All but flawless.

ABARTH

595 3dr hatch/2dr open **£16,685–£25,485** ★★★½☆
The Fiat 500's Abarth makeover makes it a true pocket rocket. **LxWxH** 3657x1627x1485 **Kerb weight** 1070kg

	Power (bhp)	Top speed (mph)	0-60/62mph	Economy (mpg)	CO_2 (g/km)
1.4 T-jet 145	143	130	7.8	37.2	134
1.4 T-jet 160 Trofeo	157	135	7.4	35.3	134
1.4 T-jet 165 Turismo	162	135	7.3	38.2	139
1.4 T-jet 180 Competizione	177	140	6.9	36.2	155
1.4 T-jet 180 Essesse	177	140	6.7	36.2	155

695 3dr hatch/2dr open **£23,895–£25,895** ★★★½☆
A convincing track-day 500 with decent dynamic ability, but overly firm ride spoils it. **LxWxH** 3657x1627x1485 **Kerb weight** 1045kg

1.4 T-jet 180 Rivale	177	140	6.7	36.2	155

ALFA ROMEO

Giulietta 5dr hatch **£19,975–£25,730** ★★★☆☆
Long in the tooth but still seductive, shame it's not rounded or lavish enough. **LxWxH** 4351x1798x1465 **Kerb weight** 1305kg

1.4 TB 120	118	121	9.4	36.2	164
1.6 JTDM-2 120	148	121	10.0	49.6	123-125
2.0 JTDM-2 170	168	133	8.3	47.9	TBC

Giulia 4dr saloon **£33,595–£64,900** ★★★★½
Handsome and special dynamically but lacks finesse and only comes as an auto. **LxWxH** 4643x1860x1436 **Kerb weight** 1429kg

2.0 Turbo Petrol 200	197	146	6.6	36.2	153
2.0 Turbo Petrol 280	276	149	5.7	33.6	158
2.2 Turbo Diesel 160	158	137	8.2	53.3	128
2.2 Turbo Diesel 190	187	143	7.1	52.3	128
2.9 BiTurbo Quadrifoglio	503	191	3.9	27.2	TBC

Stelvio 5dr SUV **£37,745–£70,900** ★★★★½
Alfa's first SUV is a solid effort. Choosing the petrol version gives it charisma. **LxWxH** 4687x1903x1671 **Kerb weight** 1604kg

2.2 Turbo Diesel 190	187	130	7.6	46.3	138
2.2 Turbo Diesel 190 Q4 AWD	187	130	7.6	44.1	147
2.2 Turbo Diesel 210 Q4 AWD	207	134	6.6	43.5	147
2.0 Turbo 200 Q4 AWD	197	134	7.2	30.4	176
2.0 Turbo 280 Q4 AWD	276	143	5.7	30.4	175
2.9 BiTurbo Quadrifoglio	503	197	3.8	TBC	TBC

ALPINA

B3 S 5dr touring **£63,000** ★★★★☆
Previously falling behind in the power stakes, but the recent facelift rectifies that. **LxWxH** 4632x1811x1431 **Kerb weight** 1705kg

3.0 BiTurbo	433	188-190	4.3	TBC	TBC

B4 S 2dr coupé/open **£73,100–£78,600** ★★★½☆
A retuned version of the 4 Series that feels more at home on the track than the road. **LxWxH** 4640x1825x1373 **Kerb weight** 1690kg

3.0 BiTurbo	433	189-190	4.2-4.3	TBC	TBC

B5 4dr saloon/5dr touring **£89,000–£91,000** ★★★★☆
Is it the best alternative to an M5? Yes, at least from a practicality viewpoint. **LxWxH** 4956x1868x1466 **Kerb weight** 2015kg

4.4 V8 BiTurbo	599	200-205	3.5-3.7	25.4	254

B7 4dr saloon **£121,850** ★★★★☆
A 7 Series with a power boost gives BMW a worthy challenger to the AMG S-Classes. **LxWxH** 5250x1902x1491 **Kerb weight** 2060kg

4.4 V8 BiTurbo	599	205	4.2	24.4	265

D5 S 4dr saloon **£62,000** ★★★★☆
The excellent 5 Series receives some Alpina tweaking to make it a brilliant cruiser. **LxWxH** 4956x1868x1466 **Kerb weight** 1870kg

3.0 BiTurbo	345	171	4.9	TBC	TBC

XD3 5dr SUV **£57,900** ★★★★☆
Pleasant BMW SUV impressively enhanced with the usual Alpina toolkit. **LxWxH** 4732x1897x2015 **Kerb weight** 2015kg

3.0 BiTurbo	330	158	4.9	TBC	TBC

ALPINE

A110 2dr coupé **£47,810–£56,810** ★★★★★
A much, much greater car and achievement than the sum of its parts suggest. **LxWxH** 4180x1980x1252 **Kerb weight** 1080kg

1.8 Turbo	252	155	4.5	44.1	144
1.8 Turbo S	288	162	4.4	43.4	146

ARIEL

Atom 0dr open **£39,950** ★★★★½
Simple, purist concept remains but everything else has changed... for the better. **LxWxH** 3520x1880x1122 **Kerb weight** 595kg

2.0 turbo	320	162	2.8	TBC	TBC

Nomad 0dr open **£38,000** ★★★★★
Well inside the top 10 list of our favourite cars. A revelation and a riot to drive. **LxWxH** 3215x1850x1425 **Kerb weight** 670kg

2.4 K24 i-VTEC	235	125	3.4	TBC	TBC

ASTON MARTIN

Vantage 2dr coupé **£123,850** ★★★★½
The faster, cleverer, more hardcore entry-level Aston tops its class. **LxWxH** 4465x1942x1273 **Kerb weight** 1630kg

4.0 V8	503	195	3.5	11.6	TBC

DB11 2dr coupé/2dr open **£147,900–£174,995** ★★★★★
The stunning replacement for the already seductive DB9 is tyre-shreddingly good. **LxWxH** 4739x2060x1279 **Kerb weight** 1875kg

4.0 V8	503	187	4.0	10.6	TBC
5.2 V12 AMR	630	208	3.7	13.4	TBC

DBS Superleggera 2dr coupé/open **£225,000–247,500** ★★★★★
Effortlessly fast, intoxicating to drive: the big Aston is better than ever. **LxWxH** 4712x2146x1280 **Kerb weight** 1693kg

5.2 V12	715	211	3.7	13.5	TBC

Rapide AMR 4dr saloon **£194,950** ★★★★☆
The Rapide is one of the most elegant four-door sports cars in the world. **LxWxH** 5019x1929x1360 **Kerb weight** 1995kg

6.0 V12	599	205	4.2	TBC	TBC

AUDI

A1 Sportback 5dr hatch **£18,310–£27,230** ★★★½☆
Quite pricey, but a rounded car with plenty of rational appeal. **LxWxH** 4029x1746x1418 **Kerb weight** 1105kg

1.0 25 TFSI	94	118	10.8	50.4	126-127
1.0 30 TFSI	114	126	9.5	49.6-52.3	121-129
1.5 35 TFSI	148	137	7.7	45.6-46.3	139-141
2.0 40 TFSI	197	146	6.5	39.8-40.4	158-160

A3 Sportback 5dr hatch **£23,300–£39,145** ★★★★☆
All the above but with the added convenience of five doors and a usefully larger boot. **LxWxH** 4313x1785x1426 **Kerb weight** 1180kg

1.0 30 TFSI	114	128	9.9	46.3-48.7	131-137
1.5 35 TFSI	148	137	8.2	42.2-43.5	146-152
2.0 40 TFSI	187	152	6.8	39.8-40.9	157-161
2.0 TFSI S3	298	155	4.7	33.6-34.9	184-190
1.6 30 TDI	114	126	10.4	49.6-51.4	144-148

A3 Saloon 4dr saloon **£25,020–£39,320** ★★★★☆
Undercuts the case to own an A4. Upmarket interior and good to drive. **LxWxH** 4458x1796x1416 **Kerb weight** 1240kg

1.0 30 TFSI	114	131	9.9	46.3-48.7	132-139
1.5 35 TFSI	148	139	8.2	54.3-56.5	131-136
2.0 40 TFSI	187	155	6.8	39.8-40.9	155-160
2.0 TFSI S3	298	155	4.7	34.4-34.9	184-186
1.6 30 TDI	114	131	10.4	51.4-54.3	137-143

A3 Cabriolet 2dr open **£31,095–£43,515** ★★★★☆
Compact, affordable, usable and refined. Strong performance, too. **LxWxH** 4423x1793x1409 **Kerb weight** 1380kg

1.5 35 TFSI	148	137	8.9	40.4-41.5	153-157
2.0 40 TFSI	187	155	7.2	38.7-39.8	161-165
2.0 TFSI S3	298	155	5.2	33.2	192-193

A4 4dr saloon **£29,260–£42,940** ★★★★☆
High quality and competent but leaves the dynamic finesse to its rivals. **LxWxH** 4726x1842x1427 **Kerb weight** 1320kg

2.0 35 TFSI	148	139	8.6	40.4-40.9	155-159
2.0 40 TFSI	187	155	7.3	39.2-39.8	160-164
2.0 45 TFSI quattro	242	155	5.6	35.8-36.2	177-180
2.0 35 TDI	148	136	8.9	49.6-51.4	144-148
2.0 40 TDI quattro	187	146	7.4	49.6-51.4	144-150

A4 Avant 5dr estate **£30,660–£68,270** ★★★★☆
Classy and demure estate lacks the dynamic sparkle of rivals. **LxWxH** 4725x1842x1434 **Kerb weight** 1370kg

2.0 35 TFSI	148	136	8.9	39.2-39.8	160-164
2.0 40 TFSI	187	148	7.5	37.2-38.2	168-172
2.0 45 TFSI quattro	242	155	6.0	34.4-35.3	181-185
3.0 V6 TFSI RS4 Avant	448	155	4.1	29.1	219-220
2.0 35 TDI	148	132	9.2	45.6-47.1	157-163
2.0 40 TDI	187	143-144	7.6-7.9	43.5-44.1	167-171

A5 2dr coupé **£35,465–£69,660** ★★★★☆
Refreshed coupé gets a sharper look and a refreshed interior. Still mundane to drive. **LxWxH** 4673x1846x1371 **Kerb weight** 1390kg

2.0 35 TFSI	148	140	8.9	38.7-40.4	158-165
2.0 40 TFSI	187	150	7.2	38.7-40.4	158-165
2.9 V6 TFSI RS5 quattro	443	155	3.9	30.1	212-213
2.0 40 TDI	187	150	7.7	48.7-52.3	142-151
2.0 40 TDI quattro	187	146	7.4	44.8-46.3	160-165
3.0 V6 TDI S5 quattro	345	155	4.8	TBC	TBC

A5 Sportback 5dr coupé **£34,790–£69,660** ★★★★☆
Refined, good-looking four-door coupé is sadly short on charm and finesse. **LxWxH** 4733x1843x1386 **Kerb weight** 1425kg

2.0 35 TFSI	148	139	9.1	38.2-39.8	160-167
2.0 40 TFSI	187	150	7.5	38.2-39.8	160-167
2.0 45 TFSI quattro	242	155	5.8	35.8-36.2	178-179
2.9 V6 TFSI RS5 Quattro	448	155	3.9	29.7	215-216
2.0 35 TDI	148	135	9.1	47.1-49.6	149-158
2.0 40 TDI	187	150	7.5	47.9-51.4	144-155
2.0 40 TDI quattro	187	146	7.6	44.1-45.6	162-167
3.0 V6 TDI quattro	345	155	4.9	TBC	TBC

A5 Cabriolet 2dr open **£39,395–£58,310** ★★★★☆
More practical than smaller options. Lower-powered, steel-sprung trim is best. **LxWxH** 4673x1846x1383 **Kerb weight** 1600kg

2.0 40 TFSI	187	150	7.9	36.7-37.2	173-174
2.0 45 TFSI quattro	242	155	6.5	34.0-34.4	186-187
2.0 40 TDI	187	150	8.4	45.6-46.3	161-164
2.0 40 TDI quattro	187	145	8.0	42.8-43.5	171-172

A6 4dr saloon **£39,860–£55,400** ★★★★☆
Supremely well-constructed but a bit soulless to drive. A smart office on wheels. **LxWxH** 4939x1886x1457 **Kerb weight** 1645kg

2.0 45 TFSI quattro	242	155	6.0	33.6-34.0	188-192
3.0 55 TFSI quattro	335	155	5.1	30.1-30.7	209-212
2.0 40 TDI	201	152	8.1	47.1-48.7	153-158
2.0 40 TDI quattro	201	153	7.6	44.8-46.3	161-164
3.0 50 TDI quattro	282	155	5.5	38.7-39.2	188-191

A6 Avant 5dr estate **£41,960–£57,500** ★★★★☆
A capable and high-tech throwback that's a timely reminder of what Audi does best. **LxWxH** 4939x1886x1467 **Kerb weight** 1710kg

2.0 45 TFSI quattro	242	155	6.2	32.5-33.2	193-197
3.0 55 TFSI quattro	335	155	5.3	29.4-30.1	213-217
2.0 40 TDI	201	149	8.3	44.8-46.3	161-166
2.0 40 TDI quattro	201	150	7.8	43.5-44.8	166-170
3.0 50 TDI quattro	282	155	5.7	37.7-38.2	193-196

A7 Sportback 5dr coupé **£48,860–£79,385** ★★★½☆
Easy on the eye and to live with, but let down by stolid dynamics. **LxWxH** 4969x1908x1422 **Kerb weight** 1880kg

2.0 45 TFSI quattro	242	155	6.2	32.8-33.6	190-195
3.0 55 TFSI quattro	335	155	5.3	29.7-30.1	214-215
2.0 40 TDI	201	152	8.3	45.6-47.9	155-164
2.0 40 TDI quattro	201	155	7.0	44.1-45.6	162-169
3.0 45 TDI quattro	227	155	6.5	37.7-38.2	193-195
3.0 50 TDI quattro	282	155	5.7	37.7-38.2	193-196
3.0 TDI S7 quattro	344	155	5.1	TBC	TBC

A8 4dr saloon **£71,200–£81,315** ★★★★☆
Technical tour de force benefits from Audi's knack of making very good limousines. **LxWxH** 5172x1945x1473 **Kerb weight** 1920kg

3.0 55 TFSI quattro	335	155	5.6	28.0-29.7	216-228
3.0 55 TFSI quattro LWB	335	155	5.7	27.7-28.8	223-232
3.0 50 TDI quattro	282	155	5.9	37.7-40.9	182-196
3.0 50 TDI quattro LWB	282	155	5.9	37.7-38.7	190-197

E-tron 5dr SUV **£72,270–£83,020** ★★★★½
A rounded, uber-luxurious addition to the premium EV niche. **LxWxH** 4901x1935x1629 **Kerb weight** 2490kg

55 quattro 95kWh	403	124	5.4	TBC	0

whatcar.com

WHAT CAR?

makes buying a new car online easy

Just follow these three steps:

pick.
Pick your perfect car, helped by clear, simple buying advice and independent reviews from our in-house experts.

shop.
Shop our network of approved dealers anonymously, and enjoy guaranteed Target Price savings.

drive.
Drive away happy, knowing you've paid the right price for the right car without any awkward haggling.

Q2 5dr SUV £23,395–£37,820 ★★★★☆
Audi's smallest SUV is a decent stepping stone from the A3 to the Q range. **LxWxH** 4191x1794x1508 **Kerb weight** 1205kg

	Power (bhp)	Top speed (mph)	0-60/62mph	Economy (mpg)	CO_2 (g/km)
1.0 30 TFSI	114	122	10.3	44.8-46.3	137-142
1.5 35 TFSI	148	131	8.5	40.9-42.2	152-157
2.0 40 TFSI quattro	187	141	6.5	33.2-34.9	184-192
2.0 SQ2 TFSI	298	155	4.8	32.1-33.2	192-199
1.6 30 TDI	114	122	10.5	43.5-44.8	166-170
2.0 35 TDI quattro	148	131	8.1	44.1-46.3	160-168

Q3 5dr SUV £30,805–£47,130 ★★★½☆
Typically refined and competent but feels more like an A3 than an Audi SUV. **LxWxH** 4388x1831x1608 **Kerb weight** 1385kg

1.5 35 TFSI	148	128-131	9.2-9.6	36.7-37.7	169-176
2.0 40 TFSI quattro	187	136	7.4	30.4-30.7	208-210
2.0 45 TFSI quattro	227	144	6.3	31.0	205-207
2.0 35 TDI	148	128	9.2	44.1-44.8	165-167
2.0 35 TDI quattro	148	131	9.3	39.2-40.9	182-188
2.0 40 TDI quattro	188	137	8.0	37.7	196-197

Q3 Sportback 5dr SUV £36,365–£48,765 ★★★½☆
A more sporting take on the compact SUV, with similarly stable handling. **LxWxH** 4500x1856x1567 **Kerb weight** 1460kg

1.5 35 TFSI	148	126	9.6	47.9-48.7	134-132
2.0 45 TFSI quattro	227	144	6.5	37.7	171
2.0 35 TDI	148	126	9.3	50.4-51.4	148-146

Q5 5dr SUV £42,095–£55,035 ★★★★☆
Appealing combination of Audi allure, affordable SUV practicality and attractiveness. **LxWxH** 4663x1893x1659 **Kerb weight** 1720kg

2.0 45 TFSI quattro	242	147	6.4	30.4-32.5	198-211
2.0 40 TDI quattro	187	136	8.1	36.2-38.2	193-204
2.0 50 TFSI e	249	148	6.1	128.4	49
3.0 V6 TDI SQ5 quattro	342	155	5.1	TBC	TBC

Q7 5dr SUV £54,070–£95,060 ★★★★☆
Unengaging to drive and light on feel, but the cabin is both huge and classy. **LxWxH** 5052x1968x1740 **Kerb weight** 2060kg

3.0 V6 45 TDI quattro	228	142	7.3	32.5-33.6	220-228
3.0 V6 50 TDI quattro	282	152	6.3	32.1-33.2	221-231
4.0 V8 SQ7 TDI	429	155	4.8	37.2	200

Q8 5dr SUV £67,760–£104,990 ★★★★☆
Striking and effective coupé-SUV range-topper leaves us wanting more. **LxWxH** 4986x1995x1705 **Kerb weight** 2145kg

3.0 V6 55 TFSI quattro	335	155	5.9	26.2-25.7	246-249
3.0 V6 50 TDI quattro	282	152	6.3	32.5-32.8	225-228
4.0 V8 SQ8 TDI	429	155	4.8	36.2	205

TT 2dr coupé £32,140–£53,905 ★★★★☆
Still serves up plenty of pace, style and usability for the money. It's better to drive, too. **LxWxH** 4191x1966x1376 **Kerb weight** 1365kg

2.0 40 TFSI	194	155	6.6	40.9	155-156
2.0 45 TFSI	242	155	5.8-5.9	39.8	161-162
2.0 45 TFSI quattro	242	155	5.2	35.3	181-182
2.0 TTS	302	155	4.5	34.9-35.3	182-183
2.5 TTRS	395	155	3.7	30.7-31.0	207-209

TT Roadster 2dr open £33,890–£55,655 ★★★★☆
Plenty of pace and driver reward, along with prestige and design-icon style. **LxWxH** 4191x1966x1355 **Kerb weight** 1455kg

2.0 40 TFSI	194	155	6.9	39.8	160-162
2.0 45 TFSI	242	155	6.0-6.1	38.7	165-166
2.0 45 TFSI quattro	242	155	5.5	34.0-34.4	187-188
2.0 TTS	302	155	4.8	34.0	187-188
2.5 TTRS	395	155	3.9	29.7-30.1	213-215

R8 2dr coupé £128,295–£154,195 ★★★★☆
Usable but no less involving or dramatic for it. V10 is deliciously brutal. **LxWxH** 4426x1940x1240 **Kerb weight** 1590kg

5.2 V10 FSI quattro	532	198	3.5	21.4-21.6	297-298
5.2 V10 FSI Plus quattro	601	205	3.2	21.2-21.4	299-301

R8 Spyder 2dr open £136,985–£162,885 ★★★★☆
Taking the roof off the R8 enhances the drama tenfold. **LxWxH** 4426x1940x1245 **Kerb weight** 1680kg

5.2 V10 FSI quattro	532	197	3.6	21.2	301-302
5.2 V10 FSI Plus quattro	601	204	3.3	20.9-21.1	304-305

BAC

Mono 0dr open £165,125 ★★★★½
An F-22 Raptor for the road, only significantly better built. **LxWxH** 3952x1836x1110 **Kerb weight** 580kg

2.5 VVT	305	170	2.8	TBC	TBC

BENTLEY

Continental GT 2dr coupé £148,800–£159,900 ★★★★☆
Refined and improved in every area, making the Conti a superb grand tourer. **LxWxH** 4850x1966x1405 **Kerb weight** 2244kg

4.0 V8	542	198	3.9	TBC	TBC
6.0 W12	626	207	3.6	24.1	308

Continental GTC 2dr open £163,700–£176,000 ★★★★½
Immensely capable and refined open-top cruiser with effortless performance. **LxWxH** 4850x2187x1399 **Kerb weight** 2414kg

4.0 V8	542	198	4.0	TBC	TBC
6.0 W12	626	207	3.7	20.2	317

Mulsanne 4dr saloon £234,000–£280,500 ★★★★☆
If the Rolls Phantom is best from the back seat, the Mulsanne is best in the front. **LxWxH** 5575x1926x1521 **Kerb weight** 2685kg

6.75 V8	505	184	5.1-5.3	17.4	365
6.75 V8 Speed	530	190	4.9	17.4	365

Bentayga 5dr SUV £130,500–£182,200 ★★★★½
Crewe's first attempt at a luxury SUV is a solid effort. The Diesel is wondrous. **LxWxH** 5140x1998x1742 **Kerb weight** 2505kg

4.0 V8	542	171	4.5	21.7	296
6.0 W12 Speed	626	190	3.9	TBC	308

BMW

1 Series 5dr hatch £24,430–£36,430 ★★★★½
May not drive like a traditional BMW but delivers on upmarket hatch values. **LxWxH** 4319x1799x1434 **Kerb weight** 1365kg

118i	138	132	8.5	40.9-45.6	114-121
M135i xDrive	302	155	4.8	34.4-35.8	155-157
116d	114	TBC	10.1-10.3	54.3-61.4	103
118d	148	134	8.4-8.5	54.3-57.6	108-111
120d xDrive	187	TBC	7.0	48.7-58.3	117-119

2 Series 2dr coupé £25,765–£53,260 ★★★★½
A proper compact coupé now. Could be better equipped, however. **LxWxH** 4432x1774x1418 **Kerb weight** 1420kg

218i	134	130	8.8-8.9	35.8-38.2	TBC
220i	181	143	7.2	36.2-38.2	TBC
230i	248	155	5.6	35.8-36.7	TBC
M240i	335	155	4.6-4.8	32.5	TBC
M2 Competition	404	155	4.2-4.4	28.2-29.1	TBC
218d	148	132	8.3-8.5	47.9-52.3	TBC
220d	187	143	7.1-7.2	47.1-50.4	TBC
220d xDrive	187	140	7.0	43.5-46.3	TBC
225d	220	151	6.3	46.3-47.9	TBC

2 Series Convertible 2dr open £28,965–£43,085 ★★★½☆
Better than its 1 Series forebear but lacks truly distinguishing premium qualities. **LxWxH** 4432x1774x1413 **Kerb weight** 1440kg

218i	134	130	9.4-9.6	33.6-36.2	TBC
220i	181	143	7.7	34.4-35.8	TBC
230i	248	155	5.9	34.0-34.9	TBC
M240i	335	155	4.7-4.9	31.4	TBC
218d	148	132	8.8-9.0	45.6-47.9	TBC
220d	187	143	7.5-7.6	45.6-48.7	TBC
225d	220	151	6.5	44.1-44.8	TBC

2 Series Active Tourer 5dr hatch £25,565–£37,550 ★★★★☆
BMW's FWD hatch is a proper contender but not as practical as some of its rivals. **LxWxH** 4342x1800x1555 **Kerb weight** 1360kg

218i	134	127	9.3	39.8-44.1	TBC
220i	181	142	7.4	37.2-38.7	TBC
225xe	248	125	6.7	88.3-100.9	TBC
216d	335	121	11.1	55.4-58.9	TBC
218d	148	129	9.0-9.1	49.6-55.4	TBC
220d	187	141	7.6	50.4-53.3	TBC
220d xDrive	187	138	7.5	47.9-51.4	TBC

2 Series Gran Tourer 5dr MPV £27,470–£37,750 ★★★★½
Brings a proper premium MPV to the table. Third row seats aren't adult-sized, though. **LxWxH** 4556x1800x1608 **Kerb weight** 1475kg

218i	134	127	9.5-9.8	38.2-40.9	TBC
220i	181	137	7.8	35.3-36.2	TBC
216d	335	119	11.8	53.3-55.4	TBC
218d	148	127	9.6	47.9-51.4	TBC
220d	187	138	8.2	47.9-49.6	TBC
220d xDrive	187	135	8.0	45.6-47.1	TBC

3 Series 4dr saloon £32,565–£48,555 ★★★★★
Latest 3 Series has a growth spurt, but size is no obstacle for an engaging drive. **LxWxH** 4709x1827x1442 **Kerb weight** 1450kg

320i	181	146	7.1	41.5-43.5	124-127
330i	254	155	5.8	38.2-41.5	134-139
330e	288	155	5.9	188.3-201.8	37-38
M340i xDrive	369	155	4.4	34.0-34.9	162
318d	148	132	8.3-8.4	52.3-55.4	109-116
320d	187	146	6.8-7.1	49.6-56.5	110-118
320d xDrive	187	144	6.9	47.1-49.6	119-121
330d	263	155	5.5	44.1-47.9	133-138
330d xDrive	263	155	5.1	42.2-47.1	136-140

3 Series Touring 5dr estate £35,235–£48,765 ★★★★½
Towering everyday appeal. Arguably the best all-rounder sensible money can buy. **LxWxH** 4620x1811x1430 **Kerb weight** 1565kg

330i	254	155	5.9	39.2-40.4	139-146
320d	188	142	7.1-7.9	49.6-50.4	115-121
320d xDrive	188	142	7.4	47.9-51.4	121-124
330d xDrive	261	155	5.4	42.8-43.5	142-146

4 Series 2dr coupé £34,805–£65,300 ★★★★☆
A talented GT and a brilliant B-road steer that is very well-equipped. **LxWxH** 4640x1825x1377 **Kerb weight** 1475kg

420i	181	146	7.3-7.5	35.3-37.7	TBC
420i xDrive	181	144	7.6-7.8	33.6-36.2	TBC
430i	248	155	5.8-5.9	34.9-37.2	TBC
440i	321	155	5.0-5.2	31.0-33.6	TBC
M4	425	155	4.1-4.3	27.7-28.5	TBC
M4 Competition pack	444	155	4.0-4.2	24.7-28.5	TBC
420d	187	146	7.2-7.4	46.3-50.4	TBC
420d xDrive	187	144	7.3	43.5-45.6	TBC
430d	254	155	5.5	40.9-42.2	TBC
430d xDrive	254	155	5.2	38.7-39.2	TBC
435d xDrive	308	155	4.7	39.2-40.4	TBC

4 Series Convertible 2dr open £41,495–£68,720 ★★★★☆
A talented gran tourer with the ability to remove the roof. What's not to like? **LxWxH** 4640x1825x1384 **Kerb weight** 1700kg

420i	181	146	8.2-8.4	34.0-35.8	TBC
430i	248	155	6.3-6.4	32.8-35.3	TBC
440i	321	155	5.4	29.7-30.4	TBC
M4	425	155	4.4-4.6	27.2-28.0	TBC
M4 Competition pack	444	155	4.3-4.5	26.9-28.0	TBC
420d	187	146	8.1-8.2	44.1-46.3	TBC
430d	254	155	5.9	39.2-39.8	TBC
435d xDrive	308	155	5.2	37.7-38.2	TBC

4 Series Gran Coupé 4dr coupé £34,755–£50,040 ★★★★☆
Essentially a prettier 3 Series. Good, but not better than the regular saloon. **LxWxH** 4640x1825x1404 **Kerb weight** 1520kg

420i	181	146	7.5-7.7	34.9-37.1	TBC
420i xDrive	181	144	7.8-8.1	33.2-25.8	TBC
430i	248	155	5.9	34.4-37.2	TBC
440i	321	155	5.1	30.7-31.7	TBC
420d	187	146	7.4-7.6	46.3-51.4	TBC
420d xDrive	187	144	7.5	43.5-46.3	TBC
430d	254	155	5.6	40.9-41.5	TBC
430d xDrive	254	155	5.3	38.2-39.2	TBC
435d xDrive	308	155	4.8	39.2-39.8	TBC

5 Series 4dr saloon £37,640–£98,100 ★★★★½
The perfect compromise between the comfy E-Class and dynamic XF, and then some. **LxWxH** 4936x2126x1479 **Kerb weight** 1530kg

520i	181	146	7.8	38.2-40.4	TBC
530i	248	155	6.2	35.8-38.2	TBC
540i xDrive	335	155	4.8	29.4-31.4	TBC
M5	592	155	3.4	23.5-24.1	TBC
M5 Competition	616	155	3.3	23.5-24.1	TBC
530e	248	146	6.2	117.7-128.4	TBC
518d	148	132	8.8	47.1-52.3	TBC
520d	187	147	7.5	44.1-52.3	TBC
520d xDrive	187	144	7.6	43.5-48.7	TBC
530d	261	155	5.7	43.5-45.6	TBC
530d xDrive	261	155	5.4	39.2-41.5	TBC

5 Series Touring 5dr estate £39,890–£55,900 ★★★★½
The excellent 5 Series made in more practical form. The 520d is still the best. **LxWxH** 4942x2126x1498 **Kerb weight** 1630kg

520i	181	139	8.2	34.9-38.2	TBC
530i	248	155	6.5	34.0-36.7	TBC
540i xDrive	335	155	5.1	28.2-30.4	TBC
520d	187	147	7.8	44.1-47.9	TBC
520d xDrive	187	144	7.9	42.2-46.3	TBC
530d	261	155	5.8	40.9-43.5	TBC
530d xDrive	261	155	5.6	37.7-41.5	TBC

6 Series Gran Turismo 5dr hatch £43,910–£59,010 ★★★½☆
A large improvement on the 5GT and dynamically sound. Still an oddball, though. **LxWxH** 5007x1894x1392 **Kerb weight** 1720kg

630i	254	155	6.3	32.1-34.9	TBC
640i xDrive	335	155	5.3	26.9-29.1	TBC
620d	198	137	7.9	42.8-46.3	TBC
620d xDrive	198	135	8.0	40.4-44.8	TBC
630d	261	155	6.1	40.4-43.5	TBC
630d xDrive	261	155	6.0	37.2-40.9	TBC

7 Series 4dr saloon £69,565–£139,120 ★★★★☆
Rules on in-car entertainment and diesel sophistication; otherwise too bland. **LxWxH** 5098x1902x1478 **Kerb weight** 1755kg

740i	338	155	5.5	31.7-34.0	TBC
750i xDrive	527	155	4.0	25.7-26.9	TBC
M760Li xDrive	583	155	3.8	20.8-21.6	TBC
730d	261	155	6.1	41.5-43.5	TBC
730d xDrive	261	155	5.8	39.2-40.9	TBC
740d xDrive	315	155	5.2	37.7-39.8	TBC
745e	283	155	5.1-5.2	104.6-141.2	TBC

8 Series 2dr coupé/2dr open £71,840–£107,220 ★★★★☆
Has dynamism to spare, but not quite the breadth of ability of the best sporting GTs. **LxWxH** 4843x1902x1341 **Kerb weight** 1830kg

840i	335	155	5.0	33.2-33.6	TBC
M850i xDrive	523	155	3.7	26.2-26.9	TBC
840d xDrive	316	155	4.9	39.2-40.4	TBC

8 Series Gran Coupé 4dr saloon £69,340–£97,720 ★★★★☆
Four-door grand tourer offers greater practicality than its two-door siblings. **LxWxH** 5072x1932x1397 **Kerb weight** 1800kg

840i	335	155	5.2	31.7-33.2	TBC
M850i xDrive	523	155	3.9	24.4-24.6	TBC
840d xDrive	316	155	5.1	38.2-39.2	TBC

X1 5dr SUV £28,795–£38,145 ★★★★☆
Pick of the premium bunch but a tad unrefined and has ordinary handling. **LxWxH** 4439x1821x1598 **Kerb weight** 1395kg

sDrive18i	138	127	9.7	39.2-40.9	TBC
sDrive20i	189	138	7.4	36.7-38.2	TBC
xDrive20i	189	TBC	7.7	34.4-35.8	TBC
sDrive18d	148	126	9.3-9.4	47.9-49.6	TBC
xDrive18d	148	126	9.3-9.4	46.3-47.9	TBC
xDrive20d	187	136	7.8	45.6-47.9	TBC

X2 5dr SUV £29,725–£44,235 ★★★★☆
Proves crossovers aren't always worse than the hatchbacks on which they're based. **LxWxH** 4360x1824x1526 **Kerb weight** 1460kg

sDrive18i	138	127	9.6	39.8-43.5	TBC
sDrive20i	189	141	7.7	37.2-39.8	TBC
xDrive20i	189	TBC	7.6	34.9-36.2	TBC
M35i	302	155	4.9	33.6-34.0	TBC
sDrive18d	148	129	9.3-9.8	47.9-52.3	TBC
xDrive18d	148	128	9.2	46.3-49.6	TBC
xDrive20d	185	137	7.7	45.6-50.4	TBC

X3 5dr SUV £40,355–£77,190 ★★★★☆
Continues where the last one left off. Dynamically good and more luxurious inside. **LxWxH** 4708x1891x1676 **Kerb weight** 1750kg

xDrive20i	181	134	8.3	29.4-31.4	TBC
M40i	355	155	4.8	25.7-26.6	TBC
X3M Competition	503	155	4.1	26.9	TBC
xDrive20d	187	132	8.0	39.2-41.5	TBC
xDrive30d	261	149	5.8	36.7-38.7	TBC
M40d	321	155	4.9	35.3-36.7	TBC

X4 5dr SUV £44,875–£80,110 ★★★½☆
Downsized X6 is respectable enough if not loveable, but the X3 is a better option. **LxWxH** 4671x1881x1624 **Kerb weight** 1735kg

M40i	336	155	4.9	25.9-26.9	TBC
X4M Competiton	503	155	4.1	26.7	TBC
xDrive20d	187	131	8.0	39.2-41.5	TBC
xDrive30d	254	145	5.8	36.7-40.9	TBC
M40d	322	155	4.9	35.3-27.2	TBC

X5 5dr SUV £57,640–£74,170 ★★★★☆
More capable, convenient, refined and classy SUV that's a more satisfying drive. **LxWxH** 4922x2004x1745 **Kerb weight** 2110kg

xDrive40i	335	155	5.5	25.0-27.2	TBC
xDrive45e	282	TBC	5.6	188.3-235.4	TBC
M50i	523	155	4.3	22.6-23.2	TBC
xDrive30d	261	130	6.8	34.0-37.7	TBC
M50d	395	155	5.3	32.5-33.6	TBC

X6 5dr SUV £59,340–£76,870 ★★★½☆
The world's first off-road coupé, but appearances make it difficult to love. **LxWxH** 4909x1989x1702 **Kerb weight** 2065kg

xDrive40i	338	155	5.5	26.4-28.5	TBC
M50i	523	155	4.3	23.0-23.5	TBC
xDrive30d	254	143	6.7	32.5-33.6	TBC
M50d	375	155	5.2	29.4-30.1	TBC

X7 5dr SUV £72,315–£90,935 ★★★★☆
BMW's largest SUV yet crowns the line-up, but faces strong competition. **LxWxH** 5151x2000x1805 **Kerb weight** 2395kg

xDrive40i	338	155	6.1	24.6-24.8	TBC
M50i	523	155	4.7	21.6-21.9	TBC
xDrive30d	262	155	7.0	32.8-33.6	TBC
M50d	398	155	5.4	31.0-31.4	TBC

i3 5dr hatch £35,350–£37,840 ★★★★½
Our favourite high-end small car happens to be an EV, and it could change motoring. **LxWxH** 3999x1775x1578 **Kerb weight** 1245kg

120Ah	167	93	7.3	TBC	0
120Ah S	180	99	6.9	TBC	0

i8 2dr coupé/roadster £115,105–£127,105 ★★★★☆
If BMW's plug-in hybrid is what the future of the sports car looks like, we welcome it. **LxWxH** 4689x1942x1293 **Kerb weight** 1485kg

1.5 eDrive	374	155	4.4-4.6	128.4	TBC

Z4 2dr coupé £37,115–£49,185 ★★★★☆
Better to drive than ever, but makes a better open-top cruiser than a true sports car. **LxWxH** 4689x1942x1293 **Kerb weight** 1485kg

sDrive20i	195	155	6.6	38.7-39.8	TBC
sDrive30i	255	155	5.4	37.7-38.7	TBC
M40i	338	155	4.6	33.2	TBC

CADILLAC

CTS-V 4dr saloon £85,428 ★★★★☆
Eat your heart out, Germany - but lacks handling finesse of its European rivals. **LxWxH** 5050x1863x1447 **Kerb weight** 1850kg

	Power (bhp)	Top speed (mph)	0-60/62mph	Economy (mpg)	CO_2 (g/km)
6.2 V8 RWD	640	199	3.7	TBC	TBC

Escalade 5dr SUV £93,260 ★★☆☆☆
Cadillac's luxury SUV remains too large and ungainly for the UK. **LxWxH** 5179x2061x1896 **Kerb weight** 2635kg

6.2 V8 AWD	420	112	6.7-6.9	TBC	TBC

CATERHAM

Seven 2dr open £26,490-£53,885 ★★★★½
The 360 is the sweet spot in the revised range, giving the Seven just the right hit of performance. **LxWxH** TBC **Kerb weight** 490kg

1.6 Sigma Ti-VCT 270	135	122	5.0	TBC	TBC
1.6 Sigma Ti-VCT 310	152	127	4.9	TBC	TBC
2.0 Duratec 360	180	130	4.8	TBC	TBC
2.0 Duratec 420	210	136	3.8	TBC	TBC
2.0 Supercharged 620S	310	145	3.4	TBC	TBC
2.0 Supercharged 620R	310	155	2.79	TBC	TBC

CHEVROLET

Camaro 2dr coupé/convertible £35,770-£47,850 ★★★½☆
An affordable American muscle car, but LHD only and less usable and unrefined. **LxWxH** 4784x1897 **Kerb weight** 1539kg

2.0 Turbo	268	149	5.9-6.1	TBC	TBC
6.2 V8	446	155-180	4.4-4.8	TBC	TBC

Corvette 2dr coupé/open £72,945-£100,305 ★★★½
LHD only and less usable and less able than rivals, but disarming and inimitable. **LxWxH** 4492x1872x1239 **Kerb weight** 1539kg

6.2 V8	459	180	4.1-4.2	TBC	TBC
6.2 V8 Z06	650	196	3.7-3.8	TBC	TBC

CITROEN

C-Zero 5dr hatchback £20,520 ★★★☆☆
Well-engineered electric city car, but too expensive and lacks the range of rivals. **LxWxH** 3475x1475x1600 **Kerb weight** 1120kg

Electric	64	80	15.9	TBC	0

C1 3dr hatch/5dr hatch £10,140-£14,110 ★★★½☆
Slightly cheaper than its Toyota sibling but less visually charming. **LxWxH** 3455x1615x1460 **Kerb weight** 855kg

1.0 VTi 72	71	99	12.6	TBC	TBC

C3 5dr hatchback £13,050-£19,310 ★★★½☆
Funky, fresh look gives a lease of life, shame that underneath isn't the same. **LxWxH** 3996x1749x1474 **Kerb weight** 976kg

1.2 PureTech 82	79	107	12.8	TBC	TBC
1.2 PureTech 110	107	117	9.3	TBC	TBC
1.6 BlueHDi 100	96	115	10.6	TBC	TBC

C3 Aircross 5dr hatchback £16,655-£21,245 ★★★½☆
Funky-looking C3 gets a jacked-up, rugged SUV look. **LxWxH** 4155x1765x1637 **Kerb weight** 1088kg

1.2 PureTech 82	79	103	15.9	TBC	TBC
1.2 PureTech 110	107	115	11.3	TBC	TBC
1.2 PureTech 130	127	124	10.4	TBC	TBC
1.6 BlueHDi 100	96	109	12.8	TBC	TBC

C4 Cactus 5dr hatchback £19,070-£23,335 ★★★½☆
Interesting and novel to look at but flawed to drive. **LxWxH** 4157x1729x1480 **Kerb weight** 965kg

1.2 PureTech 110	107	117	9.3-9.7	TBC	TBC
1.2 PureTech 130	128	120	8.2	TBC	TBC
1.6 BlueHDi 100	96	114	10.6-11.2	TBC	TBC
1.6 BlueHDi 120	118	125	8.7	TBC	TBC

C4 Spacetourer 5dr MPV £22,780-£31,270 ★★★★☆
Plushness and an improved dynamic make for a better car. **LxWxH** 4438x1826x1610 **Kerb weight** 1280kg

1.2 PureTech 130	126	125-128	10.1	TBC	TBC
1.6 BlueHDi 130	126	130	10.4	TBC	TBC
1.6 BlueHDi 160	158	131	8.9	TBC	TBC

Grand C4 Spacetourer 5dr MPV £24,880-£33,070 ★★★★☆
Alternative MPV offers something fresh, comfy, spacious and quietly upmarket. **LxWxH** 4602x1826x1638 **Kerb weight** 1297kg

1.2 PureTech 130	126	125-128	10.8	TBC	TBC
1.6 BlueHDi 130	126	130	11.3	TBC	TBC
1.6 BlueHDi 160	158	130	9.2	TBC	TBC

C5 Aircross 5dr SUV £23,830-£32,730 ★★★½☆
Smooth-riding SUV has an easy-going nature, but not the most dynamic. **LxWxH** 4500x1859x1670 **Kerb weight** 1530kg

1.2 PureTech 130	129	117	10.5	TBC	TBC
1.6 PureTech 180	178	134	8.2	TBC	TBC
1.5 BlueHDi 130	129	117	10.4	TBC	TBC
1.5 BlueHDi 180	174	131	8.6	TBC	TBC

Berlingo 5dr MPV £19,430-£26,650 ★★★★½
Boxy, slightly quirky and immensely practical van-based car returns to top form. **LxWxH** 4403x1921x1849 **Kerb weight** 1398kg

1.2 PureTech 110	108	109	11.5	37.5-42.4	TBC
1.5 BlueHDi 75	75	95	16.5	TBC	TBC
1.5 BlueHDi 100	101	109	12.3	TBC	TBC
1.5 BlueHDi 130	128	116	10.3	TBC	TBC

CUPRA

Ateca 5dr hatch £35,900-£41,175 ★★★½☆
First model from Seat's stand-alone performance brand has decent pace and precision. **LxWxH** 4376x1841x1615 **Kerb weight** 1615kg

2.0 TSI 300	296	153	5.2	TBC	TBC

DACIA

Sandero 5dr hatch £6995-£11,595 ★★★☆☆
A clever budget prospect but its limitations are unavoidable, even after a smart facelift. **LxWxH** 4069x1733x1519 **Kerb weight** 969kg

1.0 SCe 75	71	98	14.2	TBC	TBC
0.9 TCe 90	87	109	11.1	TBC	TBC
1.5 dCi 95	93	111	11.9	TBC	TBC

Sandero Stepway 5dr hatch £9195-£12,055 ★★★½☆
A more expensive and slightly more rugged cheap car - but still limited. **LxWxH** 4089x1761x1555 **Kerb weight** 1040kg

1.0 SCe 75	73	98	15.1	TBC	TBC
0.9 TCe 90	87	104	11.1	TBC	TBC
1.5 dCi 95	93	106	13	TBC	TBC

Logan MCV 5dr estate £8495-£13,095 ★★★☆☆
Lacks its stablemates' charms but retains their cheapness. **LxWxH** 4501x1733x1552 **Kerb weight** 980kg

1.0 SCe 75	71	98	14.7	TBC	TBC
0.9 TCe 90	87	109	11.1	TBC	TBC
1.5 dCi 95	93	111	11.8	TBC	TBC

Logan MCV Stepway 5dr estate £12,695-£15,155 ★★★☆☆
Given a rugged makeover but still lacks charm. Extremely practical, though. **LxWxH** 4528x1761x1559 **Kerb weight** 1090kg

0.9 TCe 90	87	106	12.4	TBC	TBC
1.5 dCi 95	93	111	13.0	TBC	TBC

Duster 5dr SUV £10,995-£19,955 ★★★½☆
A value champion. If cheap family transport is what you require, the Duster delivers. **LxWxH** 4315x2000x1625 **Kerb weight** 1147kg

1.0 TCe 100 4x2	99	105	12.5	TBC	TBC
1.3 TCe 130 4x2	128	118	11.1	TBC	TBC
1.3 TCe 150 4x4	148	121	10.6	TBC	TBC
1.5 dCi 115 4x2	111	111	10.5	TBC	TBC
1.5 dCi 115 4x4	111	108	12.1	TBC	TBC

DS

3 3dr hatch/2dr open £19,480-£23,480 ★★★★☆
Premium-brand philosophy and aesthetics appeal, but the 3 lacks dynamic refinement. **LxWxH** 3948x1715x1483 **Kerb weight** 1090kg

1.2 PureTech 110	107	117-118	9.6-10.2	39.1-44.8	TBC

3 Crossback 5dr SUV £24,555-£34,705 ★★★½☆
First foray into compact SUVs comfortably competes with more established rivals. **LxWxH** 4118x1802x1534 **Kerb weight** 1205kg

1.2 PureTech 100	98	112	10.9	46.0-52.0	TBC
1.2 PureTech 130	128	124	9.2	42.2-47.1	TBC
1.2 PureTech 155	153	129	8.2	41.7-45.7	TBC
1.5 BlueHDi 100	98	112	11.4	54.4-62.7	TBC

7 Crossback 5dr SUV £27,435-£44,120 ★★★½☆
DS's first premium SUV certainly has the right price tag, equipment and appeal. **LxWxH** 4570x1895x1620 **Kerb weight** 1420kg

1.2 PureTech 130	129	122	10.2	42.2-48.0	TBC
1.6 PureTech 180	178	137	8.9	35.2-38.5	TBC
1.6 PureTech 225 EAT8	218	141	8.3	33.6-36.5	TBC
1.5 BlueHDi 130	TBC	121	11.7	49.3-55.3	TBC
2.0 BlueHDi 180 EAT8	171	134	9.9	42.7	TBC

FERRARI

Portofino 2dr open £166,551 ★★★★☆
The entry-level Ferrari has the power, the looks and the touring ability. **LxWxH** 4586x1938x1318 **Kerb weight** 1664kg

3.9T V8	591	199	3.5	14.7-28.0	230-436

488 2dr coupé/open £197,418-£278,850 ★★★★★
Calm ride mixed with explosive performance. **LxWxH** 4568x1952x1213 **Kerb weight** 1475kg

3.9T V8 GTB	650	203-205	3.0	13.5-25.9	247-478
3.9T V8 Pista	710	212	2.85	15-26.2	245-430
3.9T V8 Pista Spider	710	211	2.85	15-26.2	245-430

F8 Tributo 2dr coupé £203,476 ★★★★★
The last hurrah for the pure internal combustion V8-powered mid-engined Ferrari. **LxWxH** 4611x1979x1206 **Kerb weight** 1435kg

3.9T V8 Tributo	710	211	2.9	TBC	TBC

GTC4 Lusso 2dr coupé £200,890-£243,126 ★★★★½
Another four-wheel-drive grand tourer Ferrari that is more usable than the FF. **LxWxH** 4922x1980x1383 **Kerb weight** 1865kg

3.9T V8	592	198	3.5	13.5-25.2	253-477
6.3 V12	670	208	3.4	9.9-21.0	308-648

812 Superfast 2dr open £263,033 ★★★★★
More powerful than the F12, but with better road manners making it the star of the range. **LxWxH** 4657x1971x1276 **Kerb weight** 1630kg

6.5 V12	777	211	2.9	11.2-20.0	320-572

FIAT

500 3dr hatch/2dr open £12,165-£20,995 ★★★½☆
Super desirable, super-cute city car. Pleasant, if not involving to drive. **LxWxH** 3571x1627x1488 **Kerb weight** 865kg

1.2 69hp	68	99	12.9	44.1	TBC
0.9 Twinair 85	83	107	11.0	49.6	TBC

500L 5dr MPV £17,910-£18,210 ★★★☆☆
A costly option but has some style to fill out some of its missing substance. **LxWxH** TBC **Kerb weight** TBC

1.4 95hp	93	103-111	12.8-13.2	34.0-34.9	TBC

500X 5dr hatch £18,500-£24,700 ★★★½☆
Familiar styling works rather well as a crossover. Drives okay, too. **LxWxH** 4248x1796x1600 **Kerb weight** TBC

1.6 E-Torq 110	108	112	11.5	36.7	TBC
1.0 Firefly Turbo 120hp	118	117	10.9	41.5	TBC
1.3 Firefly Turbo 150hp	148	124	9.1	40.9	TBC

Panda 5dr hatch £10,080-£16,580 ★★★½☆
Hasn't kept pace with its rivals, but sells robust, practical charm better than most. **LxWxH** 3653x1643x1551 **Kerb weight** 940kg

1.2 69hp	68	96-102	14.2-14.5	44.8	TBC
0.9 Twinair 85	83	103-110	11.2-12.1	37.2	TBC

Tipo 5dr hatch £14,905-£19,575 ★★★½☆
A 90s reboot that has been on a diet. Decent to drive and ample interior space. **LxWxH** 4368x1792x1495 **Kerb weight** 1195kg

1.4 95	93	115	12.1	36.2-36.7	TBC
1.4 T-Jet 120	118	124	9.6	36.7	TBC
1.6 Multijet II 120	118	124	9.8-10.2	48.7-51.4	TBC

Tipo Station Wagon 5dr estate £15,905-£17,905 ★★★½☆
Estate version is more practical, which mixes well with its driving characteristics. **LxWxH** 4571x1792x1514 **Kerb weight** 1205kg

1.4 95	93	115	12.3	36.2	TBC
1.4 T-Jet 120	118	124	9.8	34.4-36.7	TBC
1.6 Multijet II 120	118	124	10.1-10.4	48.7-50.4	TBC

FORD

Ka+ 5dr hatch £11,300-£15,050 ★★★½☆
The Ka gets two extra doors, and it's a breath of fresh air for the range. **LxWxH** 3929x1910x1524 **Kerb weight** 1055kg

1.2 Ti-VCT 70	69	99	15.3	48.7	TBC
1.2 Ti-VCT 85	83	105	13.3	43.5-47.9	TBC
1.5 TDCi 95	93	111	11.4	56.5-60.1	TBC

Fiesta 3dr/5dr hatch £15,995-£26,495 ★★★★½
Dynamically superb and continues the Fiesta legacy. No longer the class leader, though. **LxWxH** 4040x1735x1476 **Kerb weight** 1113kg

1.1 Ti-VCT 85	83	105	14.0	44.8-48.7	TBC
1.0T Ecoboost 100	98	111-113	10.5-12.2	40.4-50.4	TBC
1.0T Ecoboost 125	123	121	9.9	46.3-49.6	TBC
1.0T Ecoboost 140	138	125	9.0	46.3-48.7	TBC
1.5T Ecoboost 200 ST	197	144	6.5	40.4	TBC
1.5 TDCi Duratorq 85	83	108	12.5	55.4-60.1	TBC

Focus 5dr hatch £18,545-£31,995 ★★★★½
Better to drive and look at than before, and impressively good value. **LxWxH** 4378x1825x1471 **Kerb weight** 1369kg

1.0T Ecoboost 85	84	110	13.5	44.1-49.6	TBC
1.0T Ecoboost 100	99	116	12.1	44.1-50.4	TBC
1.0T Ecoboost 125	123	119-124	10-11.7	37.7-49.6	TBC
1.5T Ecoboost 150	148	127-130	8.8-9.7	38.2-46.3	TBC
1.5T Ecoboost 182	180	137-138	8.3-8.4	38.7-44.1	TBC
2.3T Ecoboost 280 ST	276	155	5.7	34.3	179
1.5 EcoBlue 95	94	114	11.4	56.5-64.2	TBC
1.5 EcoBlue 120	118	117-122	10.0-10.8	49.6-62.8	TBC
2.0 EcoBlue 150	148	127-130	8.5-9.3	44.1-57.6	TBC

Focus Estate 5dr estate £19,645-£33,095 ★★★½☆
Almost as good to drive as the hatch, but a Skoda Octavia will carry more. **LxWxH** 4669x1825x1481 **Kerb weight** 1485kg

1.0T Ecoboost 85	84	109	13.9	44.1-49.6	TBC
1.0T Ecoboost 100	99	115	12.7	44.1-50.4	TBC
1.0T Ecoboost 125	123	119-120	11.2-12.2	37.7-49.6	TBC
1.5T Ecoboost 150	148	129-130	8.9-9.2	38.2-46.3	TBC
1.5T Ecoboost 182	180	137-138	8.8	38.7-44.1	TBC
2.3T Ecoboost 280 ST	276	155	5.9	TBC	TBC
1.5 EcoBlue 95	94	112	11.8	56.5-64.2	TBC
1.5 EcoBlue 120	118	116-120	10.3-11.1	49.6-62.8	TBC
1.5 EcoBlue 150	148	126-129	8.7-9.5	44.1-57.6	TBC

Mondeo 5dr hatch/4dr saloon £21,495-£32,595 ★★★★☆
Does what great Fords do, by over-delivering on practicality, handling and value. **LxWxH** 4871x1852x1482 **Kerb weight** 1455kg

1.5 SCTi Ecoboost 165	162	133-138	9.1-9.2	22.8-41.5	TBC
2.0 TIVCT hybrid 187	184	116	9.2	40.9-52.3	TBC
2.0 TDCi Duratorq 150	148	131-133	10.7-10.9	36.7-61.4	TBC
2.0 TDCi Duratorq 180	177	138	9.9	36.7-56.5	TBC
2.0 TDCi D'torq 180 AWD	177	137	10.0	34.9-52.3	TBC

Mondeo Estate 5dr estate £23,295-£34,095 ★★★★☆
A vast and enjoyable estate that majors on everything a great Ford should. **LxWxH** 4867x1852x1501 **Kerb weight** 1476kg

1.5 SCTi Ecoboost 165	162	135	9.2-9.3	22.8-41.5	TBC
2.0 TIVCT hybrid 187	184	116	9.2	40.9-52.3	TBC
2.0 TDCi Duratorq 150	148	128-130	10.8-11.1	36.7-61.4	TBC
2.0 TDCi Duratorq 180	177	138	9.9	36.7-56.5	TBC
2.0 TDCi D'torq 180 AWD	177	137	10.0	34.9-52.3	TBC

Mustang 2dr coupé/open £38,795-£51,045 ★★★★☆
American muscle built for the UK. What's not to like? **LxWxH** 4784x1916x1381 **Kerb weight** 1653kg

2.3 Ecoboost	286	145	5.8	30.1-32.5	TBC
5.0 V8	444	155	4.8	23.2-25.7	TBC
5.0 V8 Bullitt	453	163	4.6	23.9	TBC

C-Max 5dr MPV £22,300-£28,795 ★★★½☆
A fun-to-drive and easy-to-live-with five-seat MPV. **LxWxH** 4379x1828x1610 **Kerb weight** 1391kg

1.0T Ecoboost 100	98	108	12.6	37.2-42.2	TBC
1.0T Ecoboost 125	123	116	11.4	37.2-42.2	TBC
1.5T Ecoboost 150	148	134	10.2	30.4-33.6	TBC
1.5 TDCi Duratorq 120	118	113-114	11.3-12.4	41.5-48.7	TBC

Grand C-Max 5dr MPV £23,900-£30,460 ★★★★☆
Mid-sized Ford handles well and can be had in five- or seven-seat form. Good value, too. **LxWxH** 4379x1828x1610 **Kerb weight** 1493kg

1.0T Ecoboost 100	98	107	13.6	37.2-39.8	TBC
1.0T Ecoboost 125	123	115	12.2	37.2-39.8	TBC
1.5T Ecoboost 150	148	123	10.2	30.4-32.1	TBC
1.5 TDCi Duratorq 120	118	111-112	12.3-13.4	41.5-45.6	TBC

S-Max 5dr MPV £30,490-£42,470 ★★★★☆
Better to drive and better looking than most but not quite the class leader it was. **LxWxH** 4976x1916x1655 **Kerb weight** 1645kg

2.0 TDCi EcoBlue 150	148	123	10.3	34.0-53.3	TBC
2.0 TDCi EcoBlue 190	188	129	9.5	35.8-48.7	TBC
2.0 TDCi EcoBlue 190 AWD	188	128	9.8	31.7-46.3	TBC

Galaxy 5dr MPV £33,210-£39,070 ★★★½☆
Huge seven-seat MPV. Easy to place on the road but not cheap to buy. **LxWxH** 4848x1916x1747 **Kerb weight** 1708kg

2.0 TDCi EcoBlue 150	148	122-123	10.9	33.6-52.3	TBC
2.0 TDCi EcoBlue 190	188	129-131	9.6-9.8	35.8-52.3	TBC
2.0 TDCi EcoBlue 190 AWD	188	128	10.6	31.7-44.8	TBC

Ecosport 5dr SUV £17,850-£23,000 ★★★☆☆
Facelifted version of the pumped-up Fiesta is okay, but developing-world roots show. **LxWxH** 4096x1765x1653 **Kerb weight** 1280kg

1.0T Ecoboost 100	98	105	11.9	39.8-44.1	TBC
1.0T Ecoboost 125	123	111	11.0-11.6	34.4-44.1	TBC
1.0T Ecoboost 140	138	115	10.2	39.8-43.5	TBC
1.5 TDCi EcoBlue 100	99	105	13.6	48.7-56.5	TBC

Kuga 5dr SUV £23,375-£37,200 ★★★★½
Bigger and sharper-looking than before but still retains its taut, responsive handling. **LxWxH** 4524x1838x1689 **Kerb weight** 1560kg

1.5 Ecoboost 120	118	112	12.5	34.9-35.3	TBC
1.5 Ecoboost 150	148	121	9.7	28.2-35.3	TBC
1.5 Ecoboost 176 AWD	174	124	10.1	28.5-29.1	TBC
1.5 TDCi 120	118	106-108	12.4-12.7	44.1-46.3	TBC
1.5 TDCi 150	148	119-121	9.9-10.1	37.2-39.2	TBC
1.5 TDCi 180 AWD	177	124-126	9.2-10.0	35.3-38.7	TBC

Edge 5dr SUV £37,020-£46,035 ★★★½☆
Mid-sized, US-developed SUV joins Ford's fleet to take on Europe's big SUVs. **LxWxH** 4808x1928x1692 **Kerb weight** 1912kg

2.0 EcoBlue 150	148	129	11.2	38.2-42.2	TBC
2.0 EcoBlue 238	235	134	9.6	34.4-41.5	TBC

GT 2dr coupé £420,000 ★★★★☆
The GT is back as a race car for the road. Compelling if not perfect. **LxWxH** 4808x1928x1692 **Kerb weight** 1912kg

3.5 V6 Ecoboost	650	216	3.0	TBC	TBC

Ranger 4dr pick-up £25,924-£48,784 ★★★★☆
Capable pick-up becomes off-road monster in Raptor spec, but loses VAT incentives. **LxWxH** 5277x1977x1703 **Kerb weight** 1866kg

2.0 EcoBlue 130	128	106	13.5	42.8	173
2.0 EcoBlue 170	158	109	11.8	40.4-43.5	184-207
2.0 EcoBlue 213	210	106	10.5	TBC	201-233
3.2 Duratorq TDCi 200	197	109	10.6	32.1-36.2	221-231

GINETTA

G40 Club Car 2dr coupé £35,000 (+champ pack) ★★★½☆
A balanced, affordable and fine-looking track-day car. Some of the finish isn't quite up to snuff. **LxWxH** TBC **Kerb weight** 840kg

1.8 Zetec	135	125	TBC	TBC	TBC

HONDA

Jazz 5dr hatch £14,600-£19,810 ★★★★☆
Not the most compact or vivacious but has decent handling and is cleverly packaged. **LxWxH** 3995x1694x1550 **Kerb weight** 1066kg

1.3 i-VTEC	99	113-118	11.2-12.3	48.7	TBC
1.5 i-VTEC	128	113-118	8.7-10.1	42.8	TBC

Civic 5dr hatch £19,305-£34,075 ★★★★☆
A fresh look while remaining practical, refined and upmarket. Lacks some dynamism. **LxWxH** 4518x1799x1434 **Kerb weight** 1275kg

1.0 VTEC Turbo 126PS	124	125-126	10.2-11.2	47.9	TBC
1.5 VTEC Turbo 182PS	179	125-136	8.2-8.5	46.3	TBC
1.6 i-DTEC 120PS	118	125	10.1	62.8	TBC
2.0 VTEC Turbo Type R	315	169	5.8	33.2	TBC

Civic 4 Door 4dr saloon £19,905-£28,155 ★★★★☆
Saloon bodystyle gives Civic a more upmarket feel, without hurting its refined drive. **LxWxH** 4648x1799x1416 **Kerb weight** 1314kg

1.0 VTEC Turbo 126PS	124	130	10.7	47.9	TBC
1.6 i-DTEC 120PS	118	125	9.9	64.2	TBC

HR-V 5dr SUV £20,040-£29,615 ★★★½☆
Cleverly packaged and comfortable. Bland performance and forgettable, though. **LxWxH** 4294x1772x1605 **Kerb weight** 1241kg

1.5 i-VTEC 130PS	128	116-119	10.2-11.4	42.2	TBC
1.5 i-VTEC Turbo 182PS	180	134	7.8	47.1-47.9	TBC
1.6 i-DTEC	120	119	10.0	54.3-56.5	TBC

CR-V 5dr SUV £26,310-£38,830 ★★★★☆
Tardis-like SUV stalwart has lots of space for five and a big boot. **LxWxH** 4605x1820x1685 **Kerb weight** 1515kg

1.5 i-VTEC	171	130	9.3	38.7	TBC
1.5 i-VTEC AWD	171	124-129	9.8-10.0	32.5-36.2	TBC
2.0 i-MMD hybrid	181	112	9.2	40.9	TBC

NSX 2dr coupé £144,755 ★★★★½
Honda's supercar given a modern reboot, and it's some piece of engineering. **LxWxH** 4487x1939x1204 **Kerb weight** 1725kg

3.5 V6 hybrid	573	191	2.9	TBC	TBC

HYUNDAI

i10 5dr hatch £9895-£14,425 ★★★★☆
Prioritises maturity over fun, resulting in a car that is practical and well-priced. **LxWxH** 3665x1660x1500 **Kerb weight** 933kg

1.0 DOHC	64	97	14.7	50.4	TBC
1.2 DOHC	84	103-109	12.1-13.8	40.9-46.3	TBC

i20 5dr hatch £13,995-£18,645 ★★★★☆
Combines decent performance with good practicality and running costs. **LxWxH** 4035x1734x1474 **Kerb weight** 980kg

1.0 T-GDI 100	98	113-117	10.8-11.4	47.9-49.6	TBC
1.0 T-GDI 120	118	118	10.2	46.3	TBC
1.2 MPI 75	74	99	13.6	46.3	TBC
1.2 MPI 84	83	106	12.8	45.6-46.3	TBC

i30 5dr hatch £17,125-£29,495 ★★★½☆
As good as we've come to expect from Hyundai, but not one inch better. **LxWxH** 4340x1795x1455 **Kerb weight** 1194kg

1.0 T-GDi 120	118	118	11.1	45.6	TBC
1.4 T-GDi 140	138	127-130	8.9-9.2	42.2-46.3	TBC
1.6 CRDi 115	113	118	11.0-11.2	58.9-60.1	TBC
2.0 T-GDi 250 N	247	155	6.4	34.9	TBC
2.0 T-GDi 275 N Performance	272	155	6.1	34.0	TBC

i30 Fastback 4dr saloon £20,435-£29,995 ★★★½☆
Combines good looks with sensible practicalities and dynamic charm. **LxWxH** 4455x1795x1425 **Kerb weight** 1287kg

1.0 T-GDi 120	118	117	11.5	54.3	TBC
1.4 T-GDi 140	138	129	9.2	49.6-52.3	TBC
2.0 T-GDi 275 N	272	155	6.1	34.0	TBC

i30 Tourer 5dr estate £17,625-£26,125 ★★★½☆
Another solid car. Good value and practical but lacks excitement. **LxWxH** 4585x1795x1465 **Kerb weight** 1245kg

1.0 T-GDi 120	118	117	11.4	47.9-49.6	TBC
1.4 T-GDi 140	138	126-129	9.2-9.5	44.8-46.3	TBC
1.6 CRDi 110	108	117	11.3	58.9-60.1	TBC
1.6 CRDi 136	134	123	10.9	56.5-57.6	TBC

i40 4dr saloon £22,995-£29,125 ★★★½☆
Useful, inoffensive and well-priced, but don't expect any fireworks. **LxWxH** 4745x1815x1470 **Kerb weight** 1497kg

1.6 GDI 135	133	122	11.5	39.2	TBC
1.6 CRDi 115	113	117	12.0	56.6	TBC
1.6 CRDi 136	134	122	10.8-11.5	54.3	TBC

i40 Tourer 5dr estate £21,610-£29,630 ★★★½☆
A practical estate but still rather dull and ordinary. **LxWxH** 4775x1815x1470 **Kerb weight** 1514kg

1.6 GDI 135	133	121	11.6	38.2	TBC
1.6 CRDi 115	113	116	12.2	54.6	TBC
1.6 CRDi 136	134	121-122	11.0-11.7	52.3	TBC

Ioniq 5dr hatch £21,790-£32,045 ★★★½☆
First attempt at electrification for the masses is a good effort. **LxWxH** 4470x1820x1450 **Kerb weight** 1370kg

1.6 Hybrid 141	139	115	10.8-11.1	61.4-62.8	TBC
1.6 Plug-in Hybrid 141	139	110	10.6	247.8	TBC
Electric Motor

	Power (bhp)	Top speed (mph)	0-60/62mph	Economy (mpg)	CO_2 (g/km)
1.0 T-GDi 120 2WD	118	112	12.0	44.1-44.8	TBC
1.6 T-GDi 177PS 4WD	175	127	7.9	34.0-33.6	TBC
1.6 CRDi 115 2WD	113	114	10.7	55.4-56.5	TBC
1.6 CRDi 136 2WD	134	119	10.2	52.3	TBC
Electric 39kWh	134	96	9.6	TBC	0
Electric 64kWh	201	104	7.6	TBC	0

Nexo 5dr SUV £65,995 ★★★½☆
Impressive effort that heads in the right direction for fuel cell cars. **LxWxH** 4670x2060x1640 **Kerb weight** 1814kg

95kW fuel cell	161	130	9.6	42mpkg	0

Tucson 5dr SUV £22,045-£34,945 ★★★½☆
Classy, roomy cabin and predictable handling. A very competitive SUV. **LxWxH** 4475x1850x1650 **Kerb weight** 1379kg

1.6 GDi 132PS	130	113	11.5	35.3	TBC
1.6 T-GDi 177PS	175	125-126	8.9-9.2	34.9-36.2	TBC
1.6 CRDi 115PS	113	109	13.7	48.7-49.6	TBC
1.6 CRDi 136PS	134	114-116	10.6-12.0	45.6-47.1	TBC
2.0 CRDi 185PS	182	125	9.5	40.9	TBC

Santa Fe 5dr SUV £33,425-£43,295 ★★★½☆
Another big Korean SUV with lots of space for not a lot of cash. Slick and comfy. **LxWxH** 4700x1880x1675 **Kerb weight** 1939kg

2.2 CRDi 200	197	127	9.3-9.4	38.7-43.5	TBC
2.2 CRDi 200 AWD	197	127	9.4-9.5	38.7-40.4	TBC

JAGUAR

XE 4dr saloon £31,505-£45,640 ★★★★½
Tops the pile thanks to outstanding driver appeal. Poised and engaging but refined. **LxWxH** 4672x1967x1416 **Kerb weight** 1450kg

2.0d 163	160	132-133	8.3-8.9	47.8-50.7	TBC
2.0d 180	177	140	7.6-7.9	45.7-51.1	TBC
2.0d 180 AWD	177	140	7.8	40.8-44.7	TBC
2.0d 240 AWD	236	155	6.1	38.9-42.5	TBC
2.0t 200	197	148	7.2	32.5-35.1	TBC
2.0t 250	246	155	6.2	32.6-25.1	TBC
2.0t 300 AWD	295	155	5.4	30.0-33.2	TBC

XF 4dr saloon £34,950-£53,035 ★★★★½
Outstandingly broad-batted dynamically, plus a pleasant cabin. **LxWxH** 4954x1987x1457 **Kerb weight** 1545kg

2.0d 163	160	132	8.7	46.1-50.4	TBC
2.0d 180	177	136	8.0-8.1	44.8-50.9	TBC
2.0d 180 AWD	177	136	8.4	40.2-44.4	TBC
2.0d 240 AWD	236	153	6.5	38.5-42.7	TBC
3.0d V6 300	295	155	6.2	40.8-43.2	TBC
2.0t 250	246	152	6.6	31.5-34.4	TBC
2.0t 300 AWD	295	155	5.8	29.9-32.6	TBC

XF Sportbrake 5dr estate £37,390-£55,035 ★★★★½
Superb XF is now available in the more practical Sportbrake form. It's a win-win. **LxWxH** 4954x1987x1496 **Kerb weight** 1660kg

2.0d 163	160	136	9.3-9.4	45.8-48.2	TBC
2.0d 180	177	138	8.8	44.0-48.4	TBC
2.0d 180 AWD	177	136	8.9	39.3-43.1	TBC
2.0d 240 AWD	236	150	6.7	37.8-41.5	TBC
3.0d V6 300	295	155	6.6	40.1-42.1	TBC
2.0t 250	246	150	7.1	30.8-33.3	TBC
2.0t 300	295	155	6.1	28.9-31.0	TBC

XJ 4dr saloon £62,360-£83,105 ★★★★☆
Mixes dynamism and refinement so well, but not as spacious or cosseting as some. **LxWxH** 5130x1899x1460 **Kerb weight** 1835kg

3.0d V6 300	295	155	6.2	35.7-36.3	TBC

F-Type 2dr coupé £51,925-£113,085 ★★★★½
A full-blooded assault on Porsche's backyard, with noise, power and beauty. **LxWxH** 4482x1923x1311 **Kerb weight** 1525kg

2.0t 300	295	155	5.7	30.3-31.2	TBC
3.0s V6 340	335	161	5.3-5.7	25.1-28.3	TBC
3.0s V6 380	374	171	4.9-5.5	24.6-26.6	TBC
3.0s V6 380 AWD	374	171	5.1	25.0-25.3	TBC
5.0s V8 550 R AWD	542	186	4.1	25.7-25.9	TBC
5.0s V8 575 SVR AWD	567	200	3.7	25.5	TBC

F-Type Convertible 2dr open £57,405-£118,575 ★★★★½
Costs serious money, but you get a serious car with a likeable wild side. **LxWxH** 4482x1923x1308 **Kerb weight** 1545kg

2.0t 300	295	155	5.7	30.4-31.1	TBC
3.0s V6 340	335	161	5.3-5.7	27.4-27.9	TBC
3.0s V6 380	374	171	4.9-5.5	25.9-26.2	TBC
3.0s V6 380 AWD	374	171	5.1	25.0-25.4	TBC
5.0s V8 550 R AWD	542	186	4.1	25.7-26.0	TBC
5.0s V8 575 SVR AWD	567	195	3.7	25.5	TBC

E-Pace 5dr SUV £28,930-£46,060 ★★★★☆
Jaguar's second SUV looks enticing, but can it make an impact like the F-Pace's? **LxWxH** 4411x1984x1649 **Kerb weight** 1775kg

2.0 D150	148	124	9.5	39.1-42.6	TBC
2.0 D150 AWD	148	120	9.9-10.1	36.3-41.7	TBC
2.0 D180 AWD	177	127-128	8.7-9.4	36.1-41.1	TBC
2.0 D240 AWD	236	139	7.0	34.5-36.9	TBC
2.0 P200 AWD	198	134	7.7	27.8-30.1	TBC
2.0 P250 AWD	245	143	6.6	27.1-29.5	TBC
2.0 P300 AWD	295	151	5.9	26.2-28.1	TBC

F-Pace 5dr SUV £36,520-£74,835 ★★★★☆
Credible first SUV effort is as refined and dynamic as a Jaguar should be. **LxWxH** 4746x2070x1667 **Kerb weight** 1690kg

2.0d 163	160	121	10.2	40.9-44.8	TBC
2.0 20d 180	177	129	8.5	39.9-43.4	TBC
2.0 20d 180 AWD	177	129	8.7	36.8-40.0	TBC
2.0 25d 240 AWD	236	135	7.2	35.4-38.5	TBC
3.0 V6 30d 300 AWD	295	150	6.2	34.2-36.6	TBC
2.0 25t 250 AWD	246	135	6.8	27.2-29.2	TBC
2.0 30t 300 AWD	295	145	6.0	26.2-28.0	TBC
5.0 V8 SVR 550 AWD	548	176	4.1	22.1	TBC

I-Pace 5dr SUV £64,495-£74,995 ★★★★½
Fast, refined and the first of its kind from a European manufacturer. **LxWxH** 4682x1895x1558 **Kerb weight** 2133kg

EV400	398	124	4.5	TBC	0

JEEP

Compass 5dr SUV £23,755-£35,325 ★★★☆☆
Wants to be a catch-all crossover, but is beaten by more road-focused rivals. **LxWxH** 4394x2033x1629 **Kerb weight** 1430kg

1.4 Multiair II 140	138	119	9.9	TBC	TBC
1.4 Multiair II 170 4WD	167	124	9.5	TBC	TBC
1.6d MultiJet II 120	118	115	11.0	TBC	TBC
2.0d MultiJet II 140 4WD	138	118	10.1	TBC	TBC
2.0d MultiJet II 170 4WD	167	122	9.5	TBC	TBC

	Power (bhp)	Top speed (mph)	0-60/62mph	Economy (mpg)	CO_2 (g/km)

Renegade 5dr SUV £23,500-£31,400 ★★★½☆
Middling compact crossover with chunky looks but no obvious charm. **LxWxH** 4236x1805x1667 **Kerb weight** 1346kg

1.0 GSE T3 120	118	115	11.2	38.2	TBC
1.3 GSE T4 150	148	122	9.4	38.2-39.8	TBC
1.6d MultiJet II 120	118	111	10.2	45.6-48.7	TBC
2.0d MultiJet II 140 4WD	138	113	9.5-10.2	37.7-40.4	TBC
2.0d MultiJet II 170 4WD	167	122	8.9	35.8	TBC

Cherokee 5dr SUV £35,750 ★★½☆☆
Hamstrung by poor UK specification. Uninspiring but practical and roomy. **LxWxH** 4624x1859x1670 **Kerb weight** 1738kg

2.2d MultiJet 185 4WD	182	127	8.8	TBC	TBC

Grand Cherokee 5dr SUV £49,880 ★★★½☆
The best Jeep on sale by some margin. Comfortable and well-equipped. **LxWxH** 4828x1943x1792 **Kerb weight** 2266kg

3.0 MultiJet 250 4WD	247	126	8.2	TBC	TBC

Wrangler 2dr/4dr SUV £44,865-£48,365 ★★★★☆
Heavy-duty off-roader goes anywhere, but lacks on-road manners. **LxWxH** 4223x1873x1840 **Kerb weight** 1827kg

2.2d MultiJet II 200 4WD	197	114	9.5	28.8-30.4	TBC

KIA

Picanto 5dr hatch £9720-£14,720 ★★★☆☆
Nice drive and cabin, but now overshadowed by rivals. **LxWxH** 3595x1406x1485 **Kerb weight** 935kg

1.0 MPi	66	100	13.8	49.6-50.4	127-129
1.0 T-GDi	99	112	10.1	48.7	133
1.25 MPi	83	100-107	11.6-13.2	42.2-49.6	129-151

Rio 5dr hatch £12,220-£18,010 ★★★½☆
Looks great and is well-priced, but nowhere near its European rivals. **LxWxH** 4065x1725x1445 **Kerb weight** 1155kg

1.0 T-GDi 99	99	115	10.3	48.7	132-133
1.0 T-GDi 118	118	118	9.8	44.8-47.1	137-142
1.25 MPi	83	107	12.5	45.6-46.3	138-140
1.4 MPi	98	103-108	11.8-13.4	42.2-46.3	138-151

Ceed 5dr hatch £18,295-£27,185 ★★★★☆
Third-generation hatchback can now compete for class honours. **LxWxH** 4310x1800x1447 **Kerb weight** 1315kg

1.0 T-GDi 118	118	116	10.9	47.9-50.4	127-134
1.4 T-GDi 138	138	128-130	8.6-8.9	43.5-46.3	139-148
1.6 T-GDI 201	201	142	7.5	38.2	169
1.6 CRDi 114	114	118	10.6	57.6-58.9	126-129
1.6 CRDI 134	134	122	10.2	57.6	129

Ceed Sportswagon 5dr estate £19,295-£28,600 ★★★★☆
All of the above, but with cavernous, more practical load space. **LxWxH** 4600x1800x1465 **Kerb weight** 1389kg

1.0 T-GDi 118	118	118	10.9	47.1	136-137
1.4 T-GDi 138	138	128-130	8.8-9.1	44.1-45.6	141-146
1.6 CRDi 114	114	119	10.7	56.5-58.9	127-132

Proceed 5dr hatch £23,840-£28,140 ★★★½☆
Alluring and interesting, but not quite as special to drive as it looks. **LxWxH** 4605x1800x1422 **Kerb weight** 1405kg

1.4 T-GDI 138	138	127-130	8.8-9.1	42.8-45.6	142-150
1.6 T-GDI 201	201	140	7.2	39.3	163
1.6 CRDI 134	134	124	9.8-10.0	54.3-56.5	132-136

Soul 5dr hatch £14,725-£30,495 ★★★½☆
Looks divide opinion. Better value now but still hardly the best option. **LxWxH** 4140x1800x1600 **Kerb weight** 1275kg

1.6 GDI 130	130	115	10.6	TBC	TBC
1.6 T-GDi 201	201	122	7.5	TBC	TBC
1.6 CRDi 134	134	112-113	10.7-10.8	TBC	TBC
27kWh Electric Drive	109	90	11.0	TBC	0

Optima 4dr saloon £22,260-£25,700 ★★★☆☆
Looks the part but is well off the pace set by its European rivals. **LxWxH** 4855x1860x1465 **Kerb weight** 1590kg

1.6 CRDi 134	134	121-122	10.6-11.2	53.3-54.3	137-139

Optima Sportswagon 5dr estate £23,100-£38,995 ★★★☆☆
Engine and finish leave it well behind rival European estates. **LxWxH** 4855x1860x1465 **Kerb weight** 1620kg

1.6 CRDi 134	134	124	9.8-10.7	51.4-52.3	140-143
2.0 T-GDi 241	241	144	7.3	30.4	211
2.0 GDi PHEV	202	119	9.1	188.3	34

Stinger 4dr saloon £32,435-£40,535 ★★★½☆
Sleek coupé-shaped saloon has the appeal and dynamics to rival Europe's best. **LxWxH** 4830x1870x1400 **Kerb weight** 1717kg

2.0 T-GDi	244	149	5.8	29.4	217
3.3 V6 T-GDi	365	168	4.7	27.7	233
2.2 CRDi	197	143	7.3	40.9	179

Venga 5dr hatch £15,625-£19,520 ★★★☆☆
A versatile interior, but firm ride and high price disappoint. **LxWxH** 4075x1765x1600 **Kerb weight** 1253kg

1.6	123	111-115	10.4-11.1	34.4-37.2	172-187

Carens 5dr MPV £19,505-£28,445 ★★★½☆
Nicely up to scratch without feeling cheap or austere, but no class leader. **LxWxH** 4525x1805x1605 **Kerb weight** 1483kg

1.6 GDi	133	115	10.9	TBC	TBC
1.7 CRDi 114	114	110	12.7	TBC	TBC
1.7 CRDi 139	139	117-120	10.0-10.9	TBC	TBC

Niro 5dr SUV £23,490-£30,845 ★★★½☆
Kia's first full hybrid is a solid attempt, but it lacks the refinement of better rivals. **LxWxH** 4355x1805x1545 **Kerb weight** 1500kg

1.6 GDi Hybrid	139	101	11.1	TBC	TBC
1.6 GDi Hybrid PHEV	139	107	10.4	TBC	TBC

Stonic 5dr SUV £16,540-£21,200 ★★★½☆
Kia's first crossover is striking and reasonably good considering the value. **LxWxH** 4140x1760x1520 **Kerb weight** 1160kg

1.4 MPI	98	107	12.2	45.6	141
1.0 T-GDi	118	115	9.9	46.3-47.1	137-138
1.6 CRDI	108	112	10.9	57.6	128

Sportage 5dr SUV £20,305-£34,545 ★★★½☆
Good ride, handling and usability. Looks good and is decent value. **LxWxH** 4480x1855x1635 **Kerb weight** 1454kg

1.6 GDi	130	113	11.1	34.9-35.7	179-184
1.6 T-GDi	174	127	8.9	34.4-34.9	184-187
1.6 T-GDI AWD	174	125-126	8.8-9.2	31.7-32.5	198-203
1.6 CRDi 114	114	109	11.4	49.6	150
1.6 CRDi 134	134	112	10.8-11.4	44.8-47.1	158-167
1.6 CRDI 134 AWD	134	112	11.6	42.8-43.5	169-173
2.0 CRDi 182 48V AWD	182	125	9.2	39.8-40.4	183-186

	Power (bhp)	Top speed (mph)	0-60/62mph	Economy (mpg)	CO_2 (g/km)

Sorento 5dr SUV £30,225-£42,925 ★★★★☆
Kia moves upmarket with a smart, well-priced and nicely appointed seven-seater. **LxWxH** 4780x1890x1685 **Kerb weight** 1932kg

2.2 CRDi	197	127	9.0-9.6	37.7-41.5	177-196

KTM

X-Bow 0dr open £57,345-£70,717 ★★★★☆
Eccentric looks and sharp handling but expensive. **LxWxH** 3738x1915x1202 **Kerb weight** 847kg

2.0 R	290	143	3.9	TBC	TBC
2.0 GT	280	143	4.1	TBC	TBC

LAMBORGHINI

Huracán 2dr coupé £162,900-£238,000 ★★★★☆
Junior Lambo mixes usability and drama skilfully. Performante is the most rounded. **LxWxH** 4459x1924x1165 **Kerb weight** 1389kg

5.2 V10	572	198	3.4	21.4	332
5.2 V10 Evo	631	201	2.9	20.3	332
5.2 V10 Performante	631	201	2.9	19.7	357

Aventador 2dr coupé £278,000-£360,000 ★★★★☆
Big, hairy V12 has astonishing visuals and performance. Handling could be sweeter. **LxWxH** 4797x2030x1136 **Kerb weight** 1575kg

6.5 V12 S	730	217	2.9	15.4	499
6.5 V12 SVJ	759	217	2.8	15.8	486

Urus 2dr coupé £159,925 ★★★★☆
Lambo's second SUV is more alluring and aims to use the V8's power better. **LxWxH** 5112x2016x1638 **Kerb weight** 2200kg

4.0 V8	631	189	3.6	22.2	325

LAND ROVER

Range Rover Evoque 5dr SUV £31,295-£49,565 ★★★★☆
Refined, luxurious baby Range Rover has matured for its second generation. **LxWxH** 4371x1996x1649 **Kerb weight** 1891kg

2.0 eD4	145	113	10.6	TBC	TBC
2.0 P200	198	134	8.0	29.1-31.3	TBC
2.0 P250	248	143	7.0	29.1-31.2	TBC
2.0 P300	298	150	6.3	28.9-30.9	TBC
2.0 D150	148	125	10.5	42.1-44.9	TBC
2.0 D150 AWD	148	122	11.2	39.9-40.0	TBC
2.0 D180	178	127	9.3	38.2-41.5	TBC
2.0 D240	238	140	7.2	37.8-40.9	TBC

Range Rover Velar 5dr SUV £45,260-£86,685 ★★★★☆
Dubbed the most car-like Landie ever and it doesn't disappoint. Expensive. **LxWxH** 4803x2032x1665 **Kerb weight** 1829kg

2.0 P250	248	135	7.1	27.7-30.8	TBC
2.0 P300	298	145	6.2	26.9-29.8	TBC
5.0 V8 P550 SVAD	548	170	4.5	23.0	TBC
2.0 D180	178	120	8.9	37.8-42.0	TBC
2.0 D240	238	135	7.4	36.5-41.1	TBC
3.0 V6 D275	272	135	7.0	34.7-38.0	TBC
3.0 V6 D300	298	150	6.7	34.7-38.0	TBC

Range Rover Sport 5dr SUV £68,155-£101,810 ★★★★½
Bigger and better; a cut-price Range Rover rather than a jumped-up Discovery. **LxWxH** 4850x2073x1780 **Kerb weight** 2111kg

2.0 P300	298	125	7.3	24.0-26.1	TBC
2.0 P400e PHEV	401	137	6.7	75.3-86.9	TBC
3.0 P400	398	140	6.2	24.9-27.4	TBC
5.0 V8 P525	522	155	5.3	18.9-20.2	TBC
5.0 V8 P575 SVR	572	176	4.5	18.9	TBC
3.0 SDV6	302	140	7.1	28.5-32.0	TBC
4.4 SDV8	336	140	7.2	25.5-27.0	TBC

Range Rover 5dr SUV £83,655-£115,875 ★★★★½
Wherever you are, the Rangie envelops you in a lavish, invincible sense of occasion. **LxWxH** 4999x2220x1835 **Kerb weight** 2249kg

3.0 SVD6	272	130	7.9	29.1-31.5	TBC
4.4 SDV8	336	135	7.3	25.4-26.6	TBC
3.0 P400	398	140	6.3	25.1-26.7	TBC
2.0 P400e	399	137	6.8	75.7-85.1	TBC
5.0 V8 P525	522	155	5.4	18.9-20.0	TBC
5.0 V8 P565 SVAD	562	155	5.4	18.9	TBC

Discovery Sport 5dr SUV £31,575-£42,475 ★★★★½
Seven seats, at home on-road and off-road, plus new-found desirability. **LxWxH** 4599x2069x1724 **Kerb weight** 1732kg

2.0 D150	148	121	10.5	42.0-47.8	TBC
2.0 D150 AWD	148	118	10.7	38.0-40.9	TBC
2.0 D180	178	126	9.1	37.3-40.4	TBC
2.0 D240	238	137	7.2	36.6-39.6	TBC
2.0 P200	198	129	8.5	28.5-30.8	TBC
2.0 P250	247	140	7.1	28.4-30.5	TBC

Discovery 5dr SUV £47,745-£57,360 ★★★★½
The country bumpkin given elocution lessons without losing its rugged capabilities. **LxWxH** 4970x2073x1888 **Kerb weight** 2115kg

2.0 SD4	234	121	8.0	TBC	TBC
3.0 V6 Td6	251	130	7.7	TBC	TBC
2.0 Si4	295	125	7.3	TBC	TBC

LEXUS

CT 5dr hatch £25,150-£31,250 ★★★★☆
Hybrid-only hatch has a pokey cabin and mismatched character traits. **LxWxH** 4350x1765x1445 **Kerb weight** 1465kg

1.8 VVT-i CT200h	134	112	10.3	53.2-54.3	TBC

ES 4dr saloon £35,150-£45,650 ★★★½☆
Gatecrashes the German-controlled saloon market in a way the GS could never manage. **LxWxH** 4975x1865x1445 **Kerb weight** 1680kg

2.5 VVT-i ES300h	218	112	8.9	48.7-53.2	TBC

IS 4dr saloon £31,895-£40,995 ★★★½☆
Sleek compact executive car is well-made and interesting but still a left-field choice. **LxWxH** 4680x1810x1430 **Kerb weight** 1620kg

2.5 VVT-i IS300h	220	125	8.3	44.1-50.0	TBC

LS 4dr saloon £73,270-£98,670 ★★★½☆
Luxury saloon gets more tech and opulence but is let down by its hybrid powertrain. **LxWxH** 5235x1900x1460 **Kerb weight** 2270kg

3.5 V6 VVT-i LS500h	348	155	5.4	35.7-36.2	TBC

RC 2dr coupé £39,145-£69,690 ★★★½☆
An also-ran, but the V8 RC F packs plenty of character and handles well enough. **LxWxH** 4695x1840x1395 **Kerb weight** 1736kg

2.5 VVT-i RC300h	220	118	8.6	40.9-45.5	TBC
5.0 V8 RC F	470	168	4.5	25.0	TBC

LC 2dr coupé £76,595-£91,995 ★★★★☆
Superb-looking coupé shows flickers of what made the LFA great. **LxWxH** 4770x1920x1345 **Kerb weight** 1935kg

5.0 V8 LC500	470	168	4.4	24.4	TBC
3.5 V6 LC500h	354	155	4.7	34.8	TBC

	Power (bhp)	Top speed (mph)	0-60/62mph	Economy (mpg)	CO_2 (g/km)

NX 5dr SUV £35,950-£45,500 ★★★☆☆
Some good ideas, but dramatically off the pace to drive. **LxWxH** 4630x1845x1645 **Kerb weight** 1905kg

2.5 VVT-i NX300h 4WD	194	112	9.2	35.7-37.1	TBC

RX 5dr SUV £49,700-£61,700 ★★★½☆
Low flexibility, but hybrid option makes a degree of economic sense. **LxWxH** 4890x1895x1690 **Kerb weight** 2100kg

3.5 V6 RX450h	308	124	7.7	35.3-37.1	120-127

UX 5dr SUV £29,905-£40,355 ★★★½☆
Refreshingly different premium SUV is a credible, if not class-leading, alternative. **LxWxH** 4495x1840x1520 **Kerb weight** 1620kg

2.0 250h	181	110	8.5	46.3-53.3	TBC

LOTUS

Elise 2dr open £41,655- £49,555 ★★★★☆
A delicate, vivid and unfettered drive; if you want a daily driver, shop elsewhere. **LxWxH** 3824x1719x1117 **Kerb weight** 830kg

1.8 VVT-i 220	217	145	4.2	36.7	TBC
1.8 VVT-i 246	242	151	3.8	36.2	TBC

Exige 2dr coupé £62,285-£103,285 ★★★★½
Sharp, uncompromising track car. Unforgiving on the road. **LxWxH** 4084x1802x1129 **Kerb weight** 1125kg

3.5 V6 VVT-i 350	345	162-170	3.8-3.9	28.2	TBC
3.5 V6 VVT-i 380	374	170-178	3.6-3.7	27.7	TBC
3.5 V6 VVT-i 430	428	180	3.2	27.7	TBC

Evora 2dr coupé £88,065 ★★★★☆
Dynamically it puts nearly everything else in the shade. Shame about the interior. **LxWxH** 4084x1802x1129 **Kerb weight** 1395kg

3.5 V6 VVT-i 410	404	174-190	4.1-4.2	25.7-26.7	TBC

MASERATI

Ghibli 4dr saloon £53,415-£57,325 ★★★☆☆
Maser's compact exec has the allure but lacks power and is poorly finished in places. **LxWxH** 4971x1945x1461 **Kerb weight** 1810kg

3.0d V6	271	155	6.3	33.2-35.7	TBC
3.0 V6	345	166	5.5	23.5-24.9	TBC

GranTurismo 2dr coupé £92,230-£107,865 ★★★☆☆
Not short on richness or desirability and well capable of stirring the soul. **LxWxH** 5652x1948x1481 **Kerb weight** 1873kg

4.7 V8	453	185	4.8	TBC	TBC

GranCabrio 2dr open £106,285-£114,330 ★★★☆☆
Fantastic looks and soundtrack but an average chassis overall. **LxWxH** 4971x1945x1461 **Kerb weight** 1973kg

4.7 V8	453	177-179	4.9-5.0	TBC	TBC

Quattroporte 4dr saloon £76,050-£86,675 ★★★☆☆
Now a full-sized executive limo, with some added flair. Off the pace in several key areas. **LxWxH** 5264x1948x1481 **Kerb weight** 1860kg

3.0d V6	271	155	6.4	33.2-35.7	TBC
3.0 V6	339	167	5.1	23.5-24.9	TBC

Levante 4dr SUV £58,315-£72,525 ★★★☆☆
Italian flair and good looks in abundance, but diesel not as sonorous as petrols. **LxWxH** 5003x1968x1679 **Kerb weight** 2109kg

3.0d V6	271	143	6.9	29.1-30.0	189
3.0 V6	339	156	6.0	20.7-22.4	249
3.0 V6 S	424	164	5.2	20.9-22.4	253

MAZDA

2 5dr hatch £13,595-£17,395 ★★★★☆
Grown-up, well-made and drives with charm and vigour; engines aren't brilliant. **LxWxH** 4060x1695x1495 **Kerb weight** 1075kg

1.5 Skyactiv-G 75	74	106	12.1	49.6	TBC
1.5 Skyactiv-G 90	88	110-114	9.4-12.0	49.6	TBC
1.5 Skyactiv-G 115	113	124	8.7	48.7	TBC

3 5dr hatch £20,595-£24,995 ★★★★☆
Pleasing dynamism teamed with good practicality and punchy diesel engines. **LxWxH** 4060x1695x1495 **Kerb weight** 1351kg

2.0 Skyactiv-G 120	118	121	8.9	43.5	TBC
2.0 Skyactiv-G 165	162	130	8.2	37.7	TBC
1.5 Skyactiv-D 105	103	115	11.0	65.7	TBC
2.2 Skyactiv-D 150	148	130	8.1	47.1	TBC

3 Fastback 4dr saloon £20,595-£21,495 ★★★★☆
Refined and dynamically satisfying in a saloon bodystyle. **LxWxH** 4060x1695x1495 **Kerb weight** 1345kg

2.0 Skyactiv-G 120	118	123	8.8	43.5	TBC

6 4dr saloon £23,195-£32,685 ★★★½☆
A compelling mix of size, economy and performance. Interior is a let-down. **LxWxH** 4870x1840x1450 **Kerb weight** 1465kg

2.0 Skyactiv-G 145	143	129	9.5	40.3-42.2	TBC
2.0 Skyactiv-G 165	162	135	9.1	42.2	TBC
2.5 Skyactiv-G 194	191	138	8.1	38.2	TBC
2.2 Skyactiv-D 150	148

CX-5 5dr SUV £24,795–£34,395 ★★★★☆
Offers powerful diesel engines and strong performance, plus a welcoming interior. **LxWxH** 4550x1840x1675 **Kerb weight** 1575kg

	Power (bhp)	Top speed (mph)	0-60/62mph	Economy (mpg)	CO_2 (g/km)
2.0 Skyactiv-G 165	162	125	10.3	36.7-38.2	TBC
2.2 Skyactiv-D 150	148	112-127	9.4-10.3	43.5-49.6	TBC
2.2 Skyactiv-D 184	181	129	9.6	39.8-42.8	TBC

MX-5 2dr open £18,995–£25,795 ★★★★★
Brilliantly packaged, priced and perfectly poised but more vibrant than the original. **LxWxH** 3915x1735x1225 **Kerb weight** 1050kg

1.5 Skyactiv-G 132	129	127	8.3	44.1	TBC
2.0 Skyactiv-G 184	181	136	6.5	40.4	TBC

MX-5 RF 2dr open £22,595–£29,195 ★★★★★
Remains perfectly poised and vibrant, even with a folding metal roof. **LxWxH** 3915x1735x1230 **Kerb weight** 1090kg

1.5 Skyactiv-G 132	129	126	8.6	44.1	TBC
2.0 Skyactiv-G 184	181	124-126	7.9-8.7	37.7-40.4	TBC

McLAREN

540C 2dr coupé £126,055 ★★★★☆
The affordable end of McLaren's spectrum isn't any less enthralling to drive. **LxWxH** 4530x2095x1202 **Kerb weight** 1449kg

3.8 V8	533	199	3.5	23.2	276

570S 2dr coupé/open £145,305–£164,750 ★★★★★
Blisteringly fast and exciting supercar-slayer with hugely appealing handling. **LxWxH** 4530x2095x1202 **Kerb weight** 1440kg

3.8 V8	562	204	3.1	23.2	276

570GT 2dr coupé £154,000 ★★★★★
The 570GT retains the lusty, fast appeal of its sister car, even with added practicality. **LxWxH** 4530x2095x1201 **Kerb weight** 1498kg

3.8 V8	562	204	3.3	23.2	276

600LT 2dr coupé £185,500 ★★★★★
Lighter, faster and more athletic than the 570S. McLaren at its very best. **LxWxH** 4604x2095x1191 **Kerb weight** 1356kg

3.8 V8	592	204	2.9	23.2	277

720S 2dr coupé £218,020 ★★★★★
The start of an era for McLaren and what a way to begin it is. **LxWxH** 4543x2059x1196 **Kerb weight** 1419kg

4.0 V8	710	212	2.9	23.2	276

GT 2dr coupé £163,000 ★★★★½
Woking's most user-friendly car to date is still a McLaren first and foremost. **LxWxH** 4683x2095x1213 **Kerb weight** 1530kg

4.0 V8	612	203	3.2	23.7	270

Senna 2dr coupé £750,000 ★★★★★
Astounding circuit performance made superbly accessible. **LxWxH** 4744x2155x1229 **Kerb weight** 1309kg

4.0 V8	789	208	2.8	22.7	280

MERCEDES-BENZ

A-Class 5dr hatch £23,075–£35,580 ★★★★☆
A little bit of luxury in a desirable, hatchback-sized package. **LxWxH** 4419x1992x1440 **Kerb weight** 1445kg

1.3 A180	136	134	9.2	42.2-47.9	TBC
1.3 A200	163	140	8.2	40.9-47.9	TBC
2.0 A220	187	149	6.9	37.7-41.5	TBC
2.0 A220 4Matic	187	146	6.9	35.8-39.8	TBC
2.0 A250	224	155	6.2	37.7-41.5	TBC
2.0 AMG A35 4Matic	302	155	4.7	33.6-35.8	TBC
1.5 A180d	116	126	10.5	53.3-61.4	TBC
2.0 A200d	148	137	8.1	53.3-58.9	TBC
2.0 A220d	187	146	7.0	52.3-57.7	TBC

A-Class Saloon 4dr saloon £26,725–£36,485 ★★★½☆
Larger, more grown-up A-Class adds premium touch to smallest Merc saloon. **LxWxH** 4549x1796x1446 **Kerb weight** 1465kg

1.3 A180	133	134	8.9	42.8-48.7	TBC
1.3 A200	161	143	8.1-8.3	42.8-48.7	TBC
2.0 A220	188	150	7.0	38.2-42.2	TBC
2.0 A220 4Matic	188	147	7.0	36.2-40.9	TBC
2.0 A250	222	155	6.3	38.2-42.2	TBC
2.0 AMG A35	302	155	4.8	32.9-36.7	TBC
1.5 A180d	114	128	10.6	56.5-64.2	TBC

B-Class 5dr hatch £26,975–£32,375 ★★★½☆
A slightly odd prospect, but practical and classy nonetheless. **LxWxH** 4393x1786x1557 **Kerb weight** 1395kg

1.3 B180	136	132	9.0	40.4-47.1	TBC
1.3 B200	163	139	8.2	39.8-46.3	TBC
1.5 B180d	116	124	10.7	51.4-60.1	TBC
2.0 B200d	148	136	8.3	51.4-57.7	TBC
2.0 B220d	187	145	7.2	50.4-56.5	TBC

C-Class 4dr saloon £30,845–£75,733 ★★★★☆
Merc ramps up the richness, but the engines and dynamics aren't refined enough. **LxWxH** 4686x1810x1442 **Kerb weight** 1450kg

1.6 C180	156	140	8.2-8.3	37.7-43.5	TBC
1.5 C200	181	149	7.7	37.7-43.5	TBC
1.5 C200 4Matic	181	145	8.1	35.3-39.8	TBC
2.0 C300	258	155	5.9	35.3-39.8	TBC
3.0 V6 AMG C43 4Matic	385	155	4.7	28.0-29.4	TBC
4.0 V8 AMG C63	469	155	4.1	25.5-25.9	TBC
4.0 V8 AMG C63 S	503	180	4.0	25.5-25.9	TBC
1.6 C200d	158	140	7.9-8.5	48.7-61.4	TBC
2.0 C220d	192	149	6.9	45.6-53.3	TBC
2.0 C220d 4Matic	192	145	6.9	40.9-47.9	TBC
2.0 C300d	241	155	5.9	43.5-49.6	TBC
2.0 C300d 4Matic	241	155	5.8	42.2-47.9	TBC

C-Class Estate 5dr estate £32,045–£79,528 ★★★★☆
Decent practicality and fantastic interior. It's a shame that it's only ordinary to drive. **LxWxH** 4702x1810x1457 **Kerb weight** 1495kg

1.6 C180	156	138-139	8.4-8.5	34.0-42.2	TBC
1.5 C200	181	146	7.9	36.7-40.9	TBC
1.5 C200 4Matic	181	143	8.4	34.5-38.7	TBC
2.0 C300	258	155	6.0	34.5-38.7	TBC
3.0 V6 AMG C43 4Matic	385	155	4.8	27.4-28.8	TBC
4.0 V8 AMG C63	469	155	4.2	25.0-25.5	TBC
4.0 V8 AMG C63 S	503	174	4.1	24.8-25.5	TBC
1.6 C200d	158	137	8.2-8.7	47.1-57.7	TBC
2.0 C220d	192	145	7.0	44.8-51.4	TBC
2.0 C220d 4Matic	192	142	7.4	41.5-46.3	TBC
2.0 C300d	241	155	6.0	42.8-47.9	TBC
2.0 C300d 4Matic	241	155	6.0	41.5-47.1	TBC

C-Class Coupé 2dr coupé £35,285–£78,023 ★★★★☆
Nice balance of style, usability and driver reward. **LxWxH** 4696x1810x1405 **Kerb weight** 1505kg

1.6 C180	156	140	8.5	35.3-42.8	TBC
1.5 C200	181	149	7.9	37.7-42.2	TBC
1.5 C200 4Matic	181	145	8.4	35.3-39.8	TBC
2.0 C300	258	155	6.0	35.8-39.8	TBC
3.0 V6 AMG C43 4Matic	385	155	4.7	28.0-29.4	TBC
4.0 V8 AMG C63	469	155	4.0	25.0-25.5	TBC
4.0 V8 AMG C63 S	503	180	3.9	25.0-25.5	TBC
2.0 C220d	192	149	7.0	46.3-52.3	TBC
2.0 C220d 4Matic	192	145	7.3	42.8-47.9	TBC
2.0 C300d	241	155	6.0	44.1-49.6	TBC
2.0 C300d 4Matic	241	155	6.0	42.8-48.7	TBC

C-Class Cabriolet 2dr open £39,104–£83,036 ★★★★☆
Take all the good bits about the coupé and add the ability to take the roof off. Bingo. **LxWxH** 4686x1810x1409 **Kerb weight** 1645kg

1.6 C180	156	137-138	8.9	33.6-41.5	TBC
1.5 C200	181	146	8.5	36.2-40.4	TBC
1.5 C200 4Matic	181	143	8.8	33.2-38.2	TBC
2.0 C300	258	155	6.2	34.0-37.7	TBC
3.0 V6 AMG C43 4Matic	385	155	4.8	27.4-28.5	TBC
4.0 V8 AMG C63	469	155	4.2	24.6-24.8	TBC
4.0 V8 AMG C63 S	503	174	4.1	24.4-24.8	TBC
2.0 C220d	191	145	7.5	44.8-49.6	TBC
2.0 C220d 4Matic	191	142	7.8	40.9-46.3	TBC
2.0 C300d	242	155	6.3	42.2-47.1	TBC

E-Class 4dr saloon £38,065–£94,725 ★★★★☆
A wee bit pricey, and less sporting than its rivals, but still comfy and luxurious. **LxWxH** 4940x1852x1452 **Kerb weight** 1680kg

2.0 E220d	189	149	7.3	43.5-51.4	TBC
2.0 E220d 4Matic	189	149	7.5	42.8-47.9	TBC
2.0 E300e	329	155	5.5	134.5-156.9	TBC
2.0 E300de	312	155	5.7	176.6-201.8	TBC
3.0 E400d 4Matic	335	155	4.9	37.7-42.8	TBC
3.0 AMG E53 4Matic+	429	155	4.5	29.7-31.4	TBC
4.0 V8 AMG E63 S 4Matic+	594	155	3.4	22.8-23.7	TBC

E-Class Estate 5dr estate £40,065–£96,725 ★★★★☆
Far more practical than its rivals, but pricier and less sporty than those closest to it. **LxWxH** 4933x1852x1475 **Kerb weight** 1780kg

2.0 E220d	189	146	7.7	41.5-47.1	TBC
2.0 E220d 4Matic	189	145	7.8	40.9-44.8	TBC
2.0 E300de	312	155	5.8	166.2-176.6	TBC
3.0 V6 E400d 4Matic	335	155	5.1	37.2-40.9	TBC
2.0 E200	181	144	8.1	31.0-35.3	TBC
3.0 V6 AMG E53 4Matic+	429	155	4.5	29.4-30.7	TBC
4.0 V8 AMG E63 S 4Matic+	594	155	3.5	22.6-23.3	TBC

E-Class Coupé 2dr coupé £41,370–£64,740 ★★★★☆
Big, laid-back four-seat tourer. Borrows looks from the ravishing S-Class Coupé. **LxWxH** 4846x1860x1431 **Kerb weight** 1685kg

2.0 E300	237	155	6.4	31.0	TBC
2.0 E350	295	155	5.9	TBC	TBC
3.0 E450 4Matic	362	155	5.6	29.1-31.4	TBC
3.0 AMG E53 4Matic+	429	155	4.4	30.1-31.4	TBC
2.0 E220d	189	150	7.4	43.5-50.4	TBC
2.0 E220d 4Matic	189	149	7.6	42.2-47.1	TBC
3.0 E400d 4Matic	335	155	5.1	38.2-42.2	TBC

E-Class Cabriolet 2dr open £45,865–£69,235 ★★★★☆
Refined and sophisticated four-seater in the same mould as the S-Class Cabriolet. **LxWxH** 4846x1860x1429 **Kerb weight** 1780kg

2.0 E300	237	155	6.6	30.0	TBC
2.0 E350	295	155	6.1	TBC	TBC
3.0 E450 4Matic	362	155	5.8	28.8-30.7	TBC
3.0 AMG E53 4Matic	429	155	4.5	29.7-30.7	TBC
2.0 E220d	192	147	7.7	42.8-48.7	TBC
2.0 E220d 4Matic	192	145	7.9	41.5-45.6	TBC
3.0 E400d 4Matic	335	155	5.2	37.7-40.9	TBC

S-Class 4dr saloon £75,285–£189,260 ★★★★★
Mercedes has given the S-Class a refresh and an added boost of tech. **LxWxH** 5141x1905x1498 **Kerb weight** 1970kg

3.0 V6 S450 L	389	155	5.1	33.2-26.2	TBC
3.0 V6 S500 L	457	155	4.8	33.2-36.2	TBC
3.0 V6 S560e L	472	155	5.0	104.6-128.4	TBC
4.0 V8 AMG S63	594	155	4.3	23.2-24.4	TBC
6.0 V12 AMG S65	611	155	4.2	18.6	TBC
6.0 V12 S650 Maybach	611	155	4.7	19.5-20.0	TBC
2.9 S350d	282	155	6.0	38.7-44.1	TBC
2.9 S400d	335	155	5.4	38.7-44.1	TBC

S-Class Coupé 2dr coupé £105,875–£190,855 ★★★★☆
More tech and cleaner engines make the opulent luxury tourer more appealing. **LxWxH** 5027x1912x1414 **Kerb weight** 2065kg

4.0 V8 S560	455	155	4.6	26.4-27.7	TBC
4.0 V8 AMG S63	594	155	4.2	24.1-24.6	TBC
6.0 V12 AMG S65	611	155	4.1	18.6	TBC

S-Class Cabriolet 2dr open £117,670–£198,780 ★★★★☆
As above but with the added allure of a retractable fabric roof. **LxWxH** 5027x1912x1420 **Kerb weight** 2150kg

4.0 V8 S560	455	155	4.6	26.4-27.2	TBC
4.0 V8 AMG S63	594	155	4.2	23.7-23.9	TBC
6.0 V12 AMG S65	611	155	4.1	18.6	TBC

CLA Coupé 4dr saloon £30,550–£43,235 ★★★★☆
May use A-Class underpinnings, but engineered to be much sportier to drive. **LxWxH** 4688x1830x1439 **Kerb weight** 1490kg

1.3 CLA180	133	134	9.0	42.8-47.9	TBC
1.3 CLA200	161	142	8.2	42.8-47.9	TBC
2.0 CLA220	188	150	7.0	38.7-42.2	TBC
2.0 CLA220 4Matic	188	147	7.0	36.7-40.4	TBC
2.0 CLA250	222	155	6.3	38.7-42.2	TBC
2.0 AMG CLA35	302	155	4.9	34.9-37.2	TBC
1.5 CLA220d	188	152	7.1	53.3-57.7	TBC

CLA Shooting Brake 5dr estate £28,245–£47,635 ★★★½☆
The most practical of the A-Class range, but it suffers for its challenging styling. **LxWxH** 4640x1777x1435 **Kerb weight** 1430kg

1.6 CLA180	119	130	8.8-9.1	35.8-40.9	TBC
1.6 CLA200	154	140	8.5	35.3-40.9	TBC
2.0 CLA220 4Matic	181	146	7.2	33.6-36.2	TBC
2.0 CLA45 AMG 4Matic	370	155	4.3	29.1-30.1	TBC
2.1 CLA220d	171	142	7.8	43.5-48.7	TBC
2.1 CLA220d 4Matic	171	140	7.8	41.5-45.6	TBC

CLS Coupé 4dr saloon £53,100–£84,120 ★★★★☆
Retains the sleek coupé style and has more tech - without losing its allure. **LxWxH** 4996x1896x1436 **Kerb weight** 1935kg

2.0 CLS350	313	155	6.0	32.1-34.9	TBC
3.0 CLS450 4Matic	356	155	4.8	31.4-34.0	TBC
3.0 V6 AMG CLS 53 4Matic+	429	155	4.5	30.1-31.0	TBC
3.0 CLS350d 4Matic	277	155	5.7	37.7-41.5	TBC
3.0 CLS400d 4Matic	330	155	5.0	37.7-41.5	TBC

SLC 2dr open £32,749–£48,400 ★★★½☆
Another small convertible exhibiting all the charm that a Mercedes should. **LxWxH** 4143x1810x1301 **Kerb weight** 1435kg

1.6 SLC180	152	139-140	7.9-8.1	37.2-42.8	TBC
2.0 SLC200	178	147-149	6.9-7.0	37.2-40.4	TBC
2.0 SLC300	237	155	5.8	35.3-37.2	TBC
3.0 V6 AMG SLC43	356	155	4.7	31.7-32.5	TBC

SL 2dr open £78,345–£119,045 ★★★★½
Big, luxurious drop-top is classier than a royal stud farm. Few feel more special. **LxWxH** 4631x1877x1315 **Kerb weight** 1735kg

3.0 V6 SL400	356	155	4.9	TBC	TBC
4.7 V8 SL500	442	155	4.3	25.9-26.9	TBC
5.5 V8 AMG SL63	568	155-186	4.1	23.2-23.5	TBC

AMG GT 2dr coupé/open £110,645–£178,765 ★★★★☆
Million-dollar looks and a railgun V8, but extremely firm chassis affects its usability. **LxWxH** 4544x1939x1287 **Kerb weight** 1615kg

4.0 V8 GT	462	188-189	4.0	23.0-23.5	TBC
4.0 V8 GT S	507	193	3.8	23.0-23.3	TBC
4.0 V8 GT C	541	196-197	3.7	21.9-22.1	TBC
4.0 V8 GT R	568	198	3.6	22.1	TBC

AMG GT 4-Door Coupé 4dr saloon £121,350–£135,350 ★★★★½
New four-door, four-wheel-drive GT may be a confusing car to contemplate, but it's a deeply impressive one to drive. **LxWxH** 5054x1953x1447 **Kerb weight** 2100kg

4.0 V8 GT63 4Matic+	585	193	3.4	21.4-22.6	TBC
4.0 V8 GT63 S 4Matic+	639	196	3.2	21.4-22.1	TBC

EQC 5dr SUV £65,640 ★★★★½
Brisk, tidy-handling electric SUV has everything needed to do well on UK roads. **LxWxH** 4762x1884x1624 **Kerb weight** 2495kg

400 4Matic	402	112	5.1	TBC	0

GLA 5dr SUV £25,105–£47,960 ★★★½☆
Not the most practical crossover but good looking and very decent to drive. **LxWxH** 4417x1804x1494 **Kerb weight** 1395kg

1.6 GLA180	120	124	8.7-9.0	35.3-40.4	TBC
1.6 GLA200	152	134	8.1-8.4	34.9-39.8	TBC
2.0 GLA250 4Matic	204	143	6.6	32.5-35.8	TBC
2.0 GLA45 AMG 4Matic	370	155	4.4	29.4-30.1	TBC
2.1 GLA200d	132	127	9.1-9.5	42.2-46.3	TBC
2.1 GLA200d 4Matic	132	124	9.1	41.5-45.6	TBC
2.1 GLA220d 4Matic	171	135	7.7	40.4-44.8	TBC

GLC 5dr SUV £37,340–£91,594 ★★★★☆
Not exactly exciting to drive, but does luxury and refinement better than most. **LxWxH** 4656x1890x1639 **Kerb weight** 1735kg

2.0 GLC 250 4Matic	208	138	7.3	28.5-31.7	TBC
3.0 V6 AMG GLC43 4Matic	356	155	4.9	24.8-26.7	TBC
4.0 V8 AMG GLC63 4Matic	462	155	4.0	22.1-23.2	TBC
4.0 V8 AMG GLC63 S 4Matic	495	155	3.8	22.1-22.8	TBC
2.1 GLC 220d 4Matic	168	130	8.3	36.7-41.5	TBC
2.1 GLC 250d 4Matic	198	138	7.6	36.7-42.2	TBC
3.0 GLC 350d 4Matic	255	148	6.2	32.8-36.7	TBC

GLC Coupé 5dr SUV £42,365–£93,989 ★★★★☆
A coupé-shaped SUV destined to be outrun by the X4 - unless you're in an AMG. **LxWxH** 4732x1890x1602 **Kerb weight** 1785kg

2.0 GLC 250 4Matic	211	138	7.3	29.1-31.7	TBC
3.0 V6 AMG GLC43 4Matic	356	155	4.9	25.0-26.9	TBC
4.0 V8 AMG GLC63 4Matic	462	155	4.0	22.4-23.5	TBC
4.0 V8 AMG GLC63 S 4Matic	495	155	3.8	22.4-23.2	TBC
2.1 GLC 220d 4Matic	168	130	8.3	37.7-40.9	TBC
2.1 GLC 250d 4Matic	198	138	7.6	37.7-41.5	TBC
3.0 GLC 350d 4Matic	255	148	6.2	33.6-36.7	TBC

GLE 5dr SUV £55,685–£62,300 ★★★★☆
The ML replacement isn't inspiring to drive but does come with a classy interior. **LxWxH** 4819x2141x1796 **Kerb weight** 2165kg

3.0 V6 GLE 400 4Matic	364	155	5.7	26.2-32.5	TBC
3.0 V6 GLE300d 4Matic	243	149	7.2	33.6-39.2	TBC
3.0 V6 GLE350d 4Matic	272	143	6.9	29.1-36.2	TBC
3.0 V6 GLE400d 4Matic	328	149	5.8	29.4-35.3	TBC

GLE Coupé 5dr SUV £65,030–£102,010 ★★★★☆
Not the prettiest SUV you will ever see, but a decent option against the BMW X6. **LxWxH** 4900x2129x1731 **Kerb weight** 2240kg

3.0 V6 GLE 350d 4Matic	251	140	7.0	TBC	TBC
3.0 V6 AMG GLE43 4Matic	379	155	5.7	23.2-24.1	TBC
5.5 V8 AMG GLE63 S 4Matic	568	155	4.2	18.2-18.7	TBC

G-Class 5dr SUV £94,000–£143,305 ★★★½☆
Massively expensive and compromised, but with character in abundance. **LxWxH** 4764x1867x1954 **Kerb weight** 2550kg

3.0 G350d 4Matic	282	124	7.4	25.2-25.9	TBC
4.0 V8 AMG G63 4Matic	577	137	4.5	18.6-18.8	TBC

GLS 5dr SUV £73,940–£106,870 ★★★½☆
The replacement for the massive GL can still seat seven in comfort. **LxWxH** 5162x1982x1850 **Kerb weight** 2475kg

3.0 V6 GLS 350d 4Matic	251	138	7.8	27.4-29.4	TBC
5.5 V8 AMG GLS63 4Matic	568	155-168	4.6	17.7-18.2	TBC

X-Class 5dr pick-up £35,238–£47,412 ★★★★☆
Lifts the bar on commercial vehicle comfort while retaining tough qualities. **LxWxH** 5340x2113x1819 **Kerb weight** 2234kg

2.3 X220 d	163	105	12.9	TBC	TBC
2.3 X250 d	190	109	11.8	TBC	TBC
3.0 V6 X350 d	285	127	7.9	TBC	TBC

MG

3 5dr hatch £9495–£12,995 ★★★½☆
Neatly tuned and nice sporty styling. Breaks the mould for sub-£9000 superminis. **LxWxH** 4018x1729x1507 **Kerb weight** 1125kg

1.5 VTI-Tech	104	108	10.4	TBC	TBC
1.5 VTi-Tech	104	109	10.9	TBC	TBC
1.0T GDi	109	112	12.4	TBC	TBC
44.5kWh EV	141	87	8.5	TBC	0

ZS 5dr SUV £12,495–£26,995 ★★★☆☆
Much improved on previous MGs, but still lacks the sophistication of its closest rivals. **LxWxH** 4314x1809x1611 **Kerb weight** 1190kg

MINI

3dr Hatch 3dr hatch £16,190–£29,990 ★★★★½
Three-pot engines and cleverly designed interior make the Mini a superb choice. **LxWxH** 3821x1727x1414 **Kerb weight** 1190kg

1.5 One	101	121	10.1-10.2	43.5-47.9	TBC
1.5 Cooper	134	130	7.8-7.9	43.5-47.9	TBC
2.0 Cooper S	189	145-146	6.7-6.8	38.7-43.5	TBC
2.0 John Cooper Works	227	152	6.1-6.3	38.7-40.4	TBC

5dr Hatch 5dr hatch £16,890–£25,030 ★★★★½
Mini charm in a more usable package, but still not as practical as rivals. **LxWxH** 3982x1727x1425 **Kerb weight** 1240kg

1.5 One	101	119	10.1-10.5	42.8-47.1	TBC
1.5 Cooper	134	129	8.1-8.2	42.2-47.1	TBC
2.0 Cooper S	189	143-144	6.8-6.9	38.2-42.8	TBC

Convertible 2dr open £20,080–£30,625 ★★★½☆
A fun open-top car but compromised on practicality and dynamics. **LxWxH** 3821x1727x1415 **Kerb weight** 1280kg

1.5 Cooper	134	128-129	8.7-8.8	41.5-45.6	TBC
2.0 Cooper S	189	142-143	7.1-7.2	38.7-40.9	TBC
2.0 John Cooper Works	167	149	6.5-6.6	37.2-38.7	TBC

Clubman 5dr hatch £19,995–£27,685 ★★★★☆
Cheery and alternative Mini 'six-door' takes the brand into new territory. **LxWxH** 4253x1800x1441 **Kerb weight** 1375kg

1.5 One	102	115	11.3	39.2-43.5	TBC
1.5 One D	114	119	10.8	56.5-58.9	TBC
1.5 Cooper	134	127	9.1	39.2-43.5	TBC
1.5 Cooper D	148	132	8.5-8.6	50.4-56.5	TBC
2.0 Cooper S	189	142	7.1-7.2	36.7-39.8	TBC

Countryman 5dr hatch £23,385–£33,995 ★★★½☆
Bigger than before, but still more funky than useful. Still not all that pretty, either. **LxWxH** 4299x2005x1557 **Kerb weight** 1440kg

1.5 Cooper	136	124	9.7	37.2-40.9	TBC
1.5 Cooper All4	136	122	10.3	35.3-40.4	TBC
2.0 Cooper S	192	140	7.5-7.6	35.8-38.2	TBC
2.0 Cooper S All4	192	138	7.6	34.4-36.2	TBC
2.0 Cooper D	150	129	9.1	47.9-54.3	TBC
2.0 Cooper D All4	150	127	9.0	46.3-49.6	TBC
1.5 plug-in hybrid	220	123	6.8	88.3-97.4	TBC

MITSUBISHI

Mirage 5dr hatch £11,295–£14,020 ★★★☆☆
A straightforward hatchback - but not for the likes of us. **LxWxH** 3795x1665x1505 **Kerb weight** 845kg

1.1 Mi-VEC	79	107	11.7-12.8	47.9-55.4	TBC

ASX 5dr SUV £19,570–£29,485 ★★★☆☆
Decent engines, but otherwise an unexceptional crossover. **LxWxH** 4355x1770x1640 **Kerb weight** 1260kg

1.6 Mi-VEC	115	114	11.5	37.7	TBC
1.6 DI-D 2WD	112	113	11.2	TBC	TBC
1.6 DI-D 4WD	112	111	11.5	TBC	TBC
2.2 DI-D 4WD	148	118	10.8	TBC	TBC

Eclipse Cross 5dr SUV £21,915–£31,015 ★★★☆☆
Stylish, future-looking mid-sized SUV shows where Mitsubishi's destiny lies. **LxWxH** 4695x1810x1710 **Kerb weight** 1425kg

1.5 Mi-VEC 2WD	160	124-127	9.3-10.3	33.2-37.7	TBC
1.5 Mi-VEC 4WD	160	124	9.8	32.5	TBC

Outlander 5dr SUV £28,220–£46,060 ★★★½☆
Creditable effort, but still cheap in places: PHEV a boon for fleet users. **LxWxH** 4695x1810x1710 **Kerb weight** 1565kg

2.0 Mi-VEC 4WD	148	118	13.3	32.5	TBC
2.2 DI-D 4WD	148	118-124	10.2-11.6	TBC	TBC
2.0 Mi-VEC PHEV	200	106	11.0	139.7	TBC

Shogun Sport 5dr SUV £37,775–£39,775 ★★★☆☆
Has a fitness for purpose that could appeal to those who tow or haul big loads. **LxWxH** 4785x1815x1805 **Kerb weight** 2100kg

2.5 DOHC 4WD	179	112	11.0	TBC	TBC

MORGAN

3 Wheeler 0dr open £39,486 ★★★★★
The eccentric, characterful and brilliant Morgan is a testament to English creativity. **LxWxH** 3225x1720x1000 **Kerb weight** 525kg

2.0 V-twin 68	68	115	7.0	TBC	TBC
2.0 V-twin 82	82	115	6.0	TBC	TBC

4/4 2dr open £40,206 ★★☆☆☆
Has its appeal but not as rewarding to drive as it could be. **LxWxH** 4010x1630x1220 **Kerb weight** 795kg

1.6 i4 Sigma	110	115	8.0	TBC	TBC

Plus 4 2dr open £44,106 ★★½☆☆
Needs more chassis finesse, but the Plus 4 still charms nonetheless. **LxWxH** 4010x1720x1220 **Kerb weight** 927kg

|

	Power (bhp)	Top speed (mph)	0-60/62mph	Economy (mpg)	CO_2 (g/km)
1.5 dCi 110	108	109	11.2	49.6	TBC

Qashqai 5dr SUV £19,995–£31,145 ★★★★½
The defining modern crossover. The Mk2 is better in all areas, hence its popularity. **LxWxH** 4394x1806x1590 **Kerb weight** 1331kg

1.3 DIG-T 140	138	120	10.5	40.1-41.4	TBC
1.3 DIG-T 160	158	123-124	8.9-9.9	40.0-41.4	TBC
1.5 dCi 115	113	112	12.3	51.9-53.7	TBC
1.7 DCI 150	148	119	9.5	46.4-50.2	TBC

X-Trail 5dr SUV £29,930–£37,525 ★★★½☆
There aren't many cheaper ways of owning an SUV. Has a better range of engines, too. **LxWxH** 4640x1820x1710 **Kerb weight** 1505kg

1.6 dCi 130	128	111-116	10.5-11.4	TBC	TBC
1.6 dCi 130 4WD	128	115	11.0	TBC	TBC
1.6 DIG-T 163	160	124	9.7	TBC	TBC
2.0 dCi 177	174	123	9.6	TBC	TBC
2.0 dCi 177 4WD	174	121-126	9.4-10.0	TBC	TBC

370Z 2dr coupé £29,805–£40,305 ★★★½☆
Old-school and profoundly mechanical coupé. The Healey 3000 of today - but meaner. **LxWxH** 4265x1845x1315 **Kerb weight** 1496kg

3.7 V6	323	155	5.3	23.3-23.6	TBC
3.7 V6 Nismo	339	155	5.2	23.2	TBC

GT-R 2dr coupé £81,995–£151,995 ★★★★☆
Monstrously fast Nissan has been tweaked and sharpened. Still a blunt object, though. **LxWxH** 4710x1895x1370 **Kerb weight** 1725kg

3.8 V6	562	196	TBC	20.2	TBC
3.8 V6 Nismo	591	196	TBC	19.6	TBC

NOBLE

M600 2dr coupé £248,000–£287,600 ★★★½☆
Deliciously natural and involving; a bit ergonomically flawed. **LxWxH** TBC **Kerb weight** 1198kg

4.4 V8	662	225	TBC	TBC	TBC

PEUGEOT

iOn 5dr hatch £20,534 ★★½☆☆
Good electric powertrain; looks extremely old hat against better EV rivals. **LxWxH** 3474x1475x1608 **Kerb weight** 1120kg

47kW	62	81	15.9	TBC	0

108 3dr/5dr hatch £9690–£14,985 ★★★½☆
Sister car to the Aygo - and a distant second to most city car rivals. **LxWxH** 3475x1615x1460 **Kerb weight** 840kg

1.0 72	71	100	13.0	53.5-57.3	TBC
1.0 72 2-Tronic	71	100	15.2	51.6-55.0	TBC

208 3dr/5dr hatch £14,900–£18,735 ★★★½☆
A big improvement for Peugeot, if not for the supermini class. **LxWxH** 3475x1615x1460 **Kerb weight** 1065kg

1.2 PureTech 82	79	109-111	12.2-14.5	46.6-51.5	TBC
1.2 PureTech 110	107	118	9.8-9.6	39.1-46.5	TBC
1.5 BlueHDi 100	102	117	10.7	55.6-67.7	TBC

308 5dr hatch £20,000–£29,920 ★★★★½
Classy all-round appeal makes it a serious contender, but rear space is a little tight. **LxWxH** 4253x1804x1457 **Kerb weight** 1190kg

1.2 PureTech 110	107	117	11.1	40.4-47.7	TBC
1.2 PureTech 130	126	128-129	9.1-9.6	41.3-48.9	TBC
1.6 PureTech 225	224	146	7.4	36.9-40.1	TBC
1.6 PureTech 260	259	155	6.0	37.8	TBC
1.6 BlueHDi 100	99	112	12.2	54.9-63.8	TBC
1.5 BlueHDi 130	126	127	9.8	53.2-62.7	TBC
2.0 BlueHDi 180 EAT8	175	140	8.2	45.0-49.4	TBC

308 SW 5dr estate £20,950–£29,330 ★★★★☆
Estate bodystyle enjoys the classy appeal of the hatchback. **LxWxH** 4585x1563x1472 **Kerb weight** 1190kg

1.2 PureTech 110	107	117	11.6	40.4-47.7	TBC
1.2 PureTech 130	126	127	9.5-10.0	41.3-48.9	TBC
1.6 PureTech 225	224	146	7.5	36.9-40.1	TBC
1.5 BlueHDI 100	99	111	12.3	54.9-63.8	TBC
1.5 BlueHDi 130	126	126	10.0	53.2-62.7	TBC
2.0 BlueHDi 180 EAT8	178	139	8.4	45.0-49.4	TBC

508 4dr saloon £25,039–£37,439 ★★★★☆
Stylish and likeable but lacking the polish of more premium rivals. **LxWxH** 4750x1859x1430 **Kerb weight** 1535kg

1.6 PureTech 180	178	143	7.9	38.0-41.8	TBC
1.6 PureTech 225	223	155	7.1	36.3-39.8	TBC
1.5 BlueHDi 130	129	129	9.4-9.7	51.4-59.8	TBC
2.0 BlueHDI 160	158	143	8.4	45.2-51.1	TBC
2.0 BlueHDi 180	174	146	8.0	45.0-50.6	TBC

508 SW 5dr estate £26,845–£40,944 ★★★☆☆
Bodystyle takes the edge off the 508's style yet doesn't fully address practicality. **LxWxH** 4778x1859x1420 **Kerb weight** 1430kg

1.6 PureTech 180	178	140	8.0	38.0-41.8	156
1.6 PureTech 225	223	153	7.4	36.3-39.8	167
1.5 BlueHDI 130	128	129	9.9-10.1	51.4-59.8	128-131
2.0 BlueHDI 160	159	140	8.5	45.2-51.1	149

2008 5dr SUV £17,730–£24,490 ★★★½☆
Efficient and well-mannered but facelift still leaves it short on space and style. **LxWxH** 4159x1829x1556 **Kerb weight** 1045kg

1.2 PureTech 82	79	105	13.5	43.8-46.8	TBC
1.2 PureTech 110	107	117-119	9.9-10.3	39.1-44.8	TBC
1.2 PureTech 130	126	124	9.3	44.4-49.9	TBC
1.6 BlueHDi 100	96	112	11.3	TBC	TBC
1.6 BlueHDi 120	116	119	9.6	52.9-58.2	TBC

3008 5dr SUV £24,575–£36,845 ★★★★☆
Cleverly packaged Peugeot offers just enough SUV DNA to make the difference. **LxWxH** 4447x2098x1624 **Kerb weight** 1250kg

1.2 PureTech 130	126	117	10.5-10.8	36.5-43.6	TBC
1.6 PureTech 180	178	136	8.0	35.2-39.6	TBC
1.5 BlueHDi 130	126	119	9.5	48.0-56.3	TBC
2.0 BlueHDi 180	175	131	8.9	42.3-47.1	TBC

5008 5dr SUV £26,725–£38,995 ★★★★☆
Less MPV, more SUV, and shares its siblings' good looks. Competent to drive, too. **LxWxH** 4641x1844x1640 **Kerb weight** 1511kg

1.2 PureTech 130	126	117	10.4-10.9	36.5-44.2	TBC
1.6 PureTech 180	178	135	8.3	35.2-39.6	TBC
1.5 BlueHDi 130	129	119	10.7	48.0-56.3	TBC
2.0 BlueHDi 180	175	131	9.1	42.3-47.1	TBC

PORSCHE

718 Boxster 2dr open £46,651–£73,405 ★★★★½
Our idea of drop-top heaven. Exceptional to drive, whether cruising or hurrying. **LxWxH** 4379x1801x1280 **Kerb weight** 1335kg

2.0	290	170	4.9-5.1	31.4-33.2	TBC
2.0 T	296	170	4.7-5.3	31.4-32.8	TBC
2.5 S	339	177	4.4-4.6	29.1-30.7	TBC
2.5 GTS	355	180	4.3-4.6	28.5-30.4	TBC
4.0 Spyder	414	187	4.4	25.7	TBC

718 Cayman 2dr coupé £44,790–£75,348 ★★★★★
Scalpel-blade incisiveness, supreme balance and outstanding driver involvement. **LxWxH** 4379x1801x1295 **Kerb weight** 1335kg

2.0	290	170	4.9-5.1	31.4-33.2	TBC
2.0 T	296	170	4.9-5.3	31.4-32.8	TBC
2.5 S	339	177	4.4-4.6	29.1-31.0	TBC
2.5 GTS	355	180	4.3-4.6	28.5-30.7	TBC
4.0 GT4	414	188	4.4	25.7	TBC

911 2dr coupé £82,793–£98,418 ★★★★½
Wider, eighth-generation 911 is still eminently fast, and capable at all speeds. **LxWxH** 4519x1852x1300 **Kerb weight** 1565kg

3.0 Carrera	380	182	4.0	26.6-28.5	TBC
3.0 Carrera 4	380	180	4.0	26.2-28.2	TBC
3.0 Carrera S	444	191	3.5	27.2-28.5	TBC
3.0 Carrera 4S	444	190	3.4	25.7-27.2	TBC

911 Cabriolet 2dr open £92,438–£108,063 ★★★★☆
Fewer compromises than ever, if rewarding only at full attack. **LxWxH** 4519x1852x1297 **Kerb weight** 1585kg

3.0 Carrera	380	180	4.2	26.2-28.0	TBC
3.0 Carrera 4	380	179	4.2	25.9-27.7	TBC
3.0 Carrera S	444	190	3.7	26.4-28.0	TBC
3.0 Carrera 4S	444	188	3.6	25.0-26.6	TBC

Panamera 4dr saloon £72,890–£149,537 ★★★★★
Revamped big saloon is an absolute belter, making it almost the perfect grand tourer. **LxWxH** 5049x1937x1423 **Kerb weight** 1815kg

3.0 V6 4	321	162	5.5-5.6	25.0-26.9	TBC
2.9 V6 4S	428	179	4.4-4.5	TBC	TBC
2.9 V6 E-Hybrid	449	172	4.6-4.7	78.5-85.6	TBC
4.0 V8 GTS	458	181	4.1	22.2-23.5	TBC
4.0 V8 Turbo	533	190	3.8-3.9	22.1-23.0	TBC
4.0 V8 Turbo S E-Hybrid	671	192	3.4-3.5	74.3-80.7	TBC

Panamera Sport Turismo 5dr estate £75,037–£142,279 ★★★★★
The Panamera in a more practical form, and now it's a good-looking beast. **LxWxH** 5049x1937x1428 **Kerb weight** 1880kg

3.0 V6 4	321	160	5.5	24.6-25.6	TBC
2.9 V6 4S	428	177	4.4	TBC	TBC
2.9 V6 E-Hybrid	449	170	4.6	76.3-80.7	TBC
4.0 V8 GTS	458	179	4.1	22.2-23.2	TBC
4.0 V8 Turbo	533	188	3.8	22.1-22.8	TBC
4.0 V8 Turbo S E-Hybrid	671	192	3.4	72.4-74.3	TBC

Taycan 4dr saloon £115,858–£138,826 ★★★★½
First all-electric Porsche shows the rest of the world how it should be done. **LxWxH** 4963x1966x1381 **Kerb weight** 2305g

Turbo	671	161	3.2	TBC	0
Turbo S	751	161	2.8	TBC	0

Macan 5dr SUV £46,913–£68,530 ★★★★½
Spookily good handling makes this a sports utility vehicle in the purest sense. **LxWxH** 4692x1923x1624 **Kerb weight** 1770kg

2.0	243	139	6.7	25.7-28.2	TBC
3.0 V6 S	351	157	5.3	23.9-25.7	TBC
3.0 V6 Turbo	434	167	4.3	23.5-24.8	TBC

Cayenne 5dr SUV £57,195–£123,349 ★★★★½
Refreshed look, improved engines, interior and a better SUV overall. **LxWxH** 4918x1983x1696 **Kerb weight** 1985kg

3.0 V6	335	152	6.2	22.2-24.1	TBC
3.0 V6 E-hybrid	456	157	5.0	60.1-72.4	TBC
2.9 V6 S	428	164	5.2	TBC	TBC
4.0 V8 Turbo	533	177	4.1	20.2-20.8	TBC
4.0 V8 S E-Hybrid	671	183	3.8	52.3-58.9	TBC

Cayenne Coupé 5dr SUV £62,129–£125,946 ★★★★☆
Little different to drive than the standard car but certainly has an appeal all of its own. **LxWxH** 4931x1983x1676 **Kerb weight** 2030kg

3.0 V6	335	150	6.0	22.2-23.9	TBC
3.0 V6 E-Hybrid	456	157	5.1	60.1-70.6	TBC
2.9 V6 S	428	163	5.0	21.9-23.7	TBC
4.0 V8 Turbo	533	177	3.9	20.2-20.8	TBC
4.0 V8 S E-Hybrid	671	183	3.8	52.3-57.6	TBC

RADICAL

RXC GT 2dr open TBC ★★★½☆
Designed for pounding around a track; out of its element on the road. **LxWxH** 4300x1960x1127 **Kerb weight** 1125kg

3.5 V6 400	400	179	2.8	TBC	TBC
3.5 V6 650	650	180	2.7	TBC	TBC

RENAULT

Twizy 2dr hatch £6695–£7995 ★★★½☆
Zany solution to personal mobility is suitably irreverent and impractical. **LxWxH** 2338x1381x1454 **Kerb weight** 474kg

MB L7e	17	50	TBC	TBC	0

Zoe 5dr hatch £18,420–£27,820 ★★★½☆
A far more practical zero-emission solution. Attractive price, too. **LxWxH** 4084x1730x1562 **Kerb weight** 1470kg

5AGEN2	86	84	13.5	TBC	0
5AGEN3	89	84	13.5	TBC	0

Twingo 3dr hatch £10,750–£13,455 ★★★☆☆
Handsome, unusual rear-engined city car but not a class leader. **LxWxH** 3595x1646x1554 **Kerb weight** 865kg

1.0 SCe 70	67	94	14.5	47.9-48.7	TBC
0.9 TCe 90	87	103	10.8	45.6-47.9	TBC

Clio 5dr hatch £13,615–£19,165 ★★★★☆
An attractive,stylish and practical proposition, but cheap in places and feels dated. **LxWxH** 4062x1732x1448 **Kerb weight** 1059kg

0.9 TCe 75	75	110	12.3	46.3-47.1	TBC
0.9 TCe 90	87	112	12.2-13.1	47.1	TBC
1.5 dCi 90	87	109-112	12.0-12.9	56.5-57.6	TBC

Mégane 5dr hatch £17,715–£29,195 ★★★½☆
Stylish and refined but bland. Nothing exceptional. **LxWxH** 4359x1814x1447 **Kerb weight** 1340kg

1.2 TCe 140	138	127	10.6	42.8-45.6	TBC
1.5 Blue dCi 115	113	118	11.1	58.9-62.8	TBC
1.8 RS 280	276	158	5.8	TBC	TBC

Mégane Sport Tourer 5dr estate £18,915–£24,615 ★★★½☆
Stylish and refined estate car is still bland like the hatch. Smaller than its predecessor. **LxWxH** 4626x1814x1457 **Kerb weight** 1409kg

1.2 TCe 140	138	127	9.8	42.2-44.8	TBC
1.5 Blue dCi 115	113	118	11.1	56.5-61.4	TBC

Scenic 5dr MPV £21,715–£26,455 ★★★½☆
Good-looking MPV riding on 20in wheels, but overall a bland car to drive. **LxWxH** 4406x1866x1653 **Kerb weight** 1428kg

1.2 TCe 140	138	121	10.1	40.4-41.5	TBC
1.8 dCi 120	118	TBC	TBC	TBC	TBC

Grand Scenic 5dr MPV £23,515–£28,255 ★★★½☆
Good-looking seven-seat MPV is bland to drive and the third row seats are tight. **LxWxH** 4634x1866x1655 **Kerb weight** 1495kg

1.2 TCe 140	138	118	11.4	39.8-40.9	TBC
1.8 dCi 120	118	120	12.1	TBC	TBC

Captur 5dr SUV £15,725–£22,065 ★★★★☆
Jacked-up Clio is among the better downsized options. Stylish and fluent-riding. **LxWxH** 4122x1778x1566 **Kerb weight** 1184kg

0.9 TCe 90	87	106	13.2	44.1-45.6	TBC
1.3 TCe 130	128	124	10.2	42.8-44.1	TBC
1.3 TCe 150	148	130	9.5	42.8-43.5	TBC
1.5 dCi 90	87	106	13.1	51.3-53.2	TBC

Kadjar 5dr SUV £20,595–£29,995 ★★★★☆
Fine value, practical, decent to drive and good-looking, but the Qashqai is classier. **LxWxH** 4449x1836x1607 **Kerb weight** 1306kg

1.2 TCe 140	138	119	10.1-10.7	41.5-44.1	TBC
1.6 TCe 160	158	127	9.2	42.8	TBC
1.5 dCi 115	112	112-113	11.7-11.9	55.4-60.1	TBC

Koleos 5dr SUV £27,495–£31,495 ★★★½☆
Koleos name returns and is a vast improvement on before, but no class leader. **LxWxH** 4672x2063x1678 **Kerb weight** 1540kg

2.0 dCi 175	169	126	10.7	38.2	TBC
2.0 dCi 175 4WD X-Tronic	169	125	9.5	36.2	TBC

ROLLS-ROYCE

Wraith 2dr coupé £224,823–£280,223 ★★★★½
An intimate and involving Rolls. Not as grand as some, but other traits make it great. **LxWxH** 5285x1947x1507 **Kerb weight** 2360kg

6.6 V12	624	155	4.6	19.8	327

Dawn 2dr open £266,055–£302,655 ★★★★½
Essentially as above, except with a detuned engine and in elegant convertible form. **LxWxH** 5295x1947x1502 **Kerb weight** 2560kg

6.6 V12	563	155	5.0	19.6	330

Ghost 4dr saloon £227,423–£262,823 ★★★★☆
'Affordable' Rolls is a more driver-focused car than the Phantom. Still hugely special. **LxWxH** 5399x1948x1550 **Kerb weight** 2360kg

6.6 V12	563	155	4.9-5.0	19.8-20.0	327-329

Phantom 4dr saloon £362,055 ★★★★★
Phantom takes opulent luxury to a whole level. **LxWxH** 5762x2018x1646 **Kerb weight** 2560kg

6.75 TV12	563	155	5.3-5.4	20.3	318-319

Cullinan 4dr SUV £250,000 ★★★★☆
Big, bold new 4x4 begins the next era for the brand, with a model that convinces. **LxWxH** 5341x2164x1835 **Kerb weight** 2730kg

6.75 TV12	563	155	5.2	18.8	341

SEAT

Mii 5dr hatch £11,900–£12,420 ★★★½☆
Not as desirable or plush as the Up but nearly as good to drive. **LxWxH** 3557x1643x1474 **Kerb weight** 929kg

1.0 60	59	99	14.4	50.4-53.3	TBC
1.0 75	74	106	13.2	49.6-51.4	TBC

Ibiza 5dr hatch £15,495–£21,645 ★★★★½
Reinvigorated Ibiza is more mature and takes the class honours from the Fiesta. **LxWxH** 4059x1780x1444 **Kerb weight** 1091kg

1.0 MPI 80	79	106	14.6	45.6-48.7	TBC
1.0 TSI 95	93	113	10.9	47.9-53.3	TBC
1.0 TSI 115	113	121	9.3	44.1-50.4	TBC
1.6 TDI 95	93	113	7.5	55.4-60.1	TBC

Leon 5dr hatch £18,260–£30,980 ★★★★☆
A creditable effort and a notable improvement in form, with plenty of niche appeal. **LxWxH** 4282x1816x1459 **Kerb weight** 1202kg

1.0 TSI 115	113	121	9.8	46.3-50.4	TBC
1.5 TSI EVO 130	128	126	9.4	42.2-46.3	TBC
1.5 TSI EVO 150	148	134	8.2	40.9-48.7	TBC
2.0 TSI 190	188	142	7.2	38.7-40.4	TBC
2.0 TSI Cupra	288	150	6.0	35.8-38.7	TBC
1.6 TDI 115	113	122	9.8	49.6-55.4	TBC
2.0 TDI 150	148	134	8.4	TBC	TBC

Leon ST 5dr estate £19,255–£34,370 ★★★★☆
Good-looking and responsive hatchback-turned-estate. **LxWxH** 4549x1816x1454 **Kerb weight** 1236kg

1.0 TSI 115	113	122	10.1	45.6-50.4	TBC
1.5 TSI EVO 130	128	129	9.5	41.5-46.3	TBC
1.5 TSI EVO 150	148	134	8.2	40.4-48.7	TBC
2.0 TSI 190	188	144	7.3	38.7-39.8	TBC
2.0 TSI Cupra	288	155	5.2	32.1-33.6	TBC
1.6 TDI 115	113	122	10.6	53.3-55.4	TBC

Arona 5dr SUV £17,145–£25,170 ★★★★☆
Seat's second SUV doesn't disappoint, with it taking charge of the class dynamically. **LxWxH** 4138x1780x1543 **Kerb weight** 1165kg

1.0 TSI 95	93	107	11.2	45.6-48.7	TBC
1.0 TSI 115	113	113	9.8-10.0	44.1-46.3	TBC
1.5 TSI EVO 150	148	127	8.3	44.8-48.7	TBC
1.6 TDI 95	93	107	11.9	49.6-56.5	TBC
1.6 TDI 115	113	115	10.3	50.4-57.6	TBC

Ateca 5dr SUV £21,940–£34,120 ★★★★½
Seat's first SUV is very good. So good, in fact, it's a Qashqai beater. **LxWxH** 4363x1841x1601 **Kerb weight** 1280kg

1.0 EcoTSI 115	113	114	11.0	42.8-42.8	TBC
1.5 TSI EVO 150	148	123	8.6	33.6-41.5	TBC
2.0 TSI 190 4Drive	187	132	7.9	32.5-33.6	TBC
1.6 TDI 115	113	114	11.5	44.1-54.3	TBC
2.0 TDI 150	148	122	9.0	46.3-50.4	TBC
2.0 TDI 190 4Drive	187	132	7.5	TBC	TBC

Alhambra 5dr MPV £27,590–£38,325 ★★★★☆
This cheaper version of the VW Sharan is spacious, versatile and good to drive. **LxWxH** 4854x1904x1730 **Kerb weight** 1755kg

1.4 TSI 150	148	124	9.9	33.2-35.8	TBC
2.0 TDI Ecomotive 150	148	123-124	10.2-10.3	38.7-44.1	TBC

Tarraco 5dr SUV £28,335–£38,055 ★★★★☆
Seat's largest SUV brings a hint of youthful exuberance to a practical category. **LxWxH** 4735x1839x1674 **Kerb weight** 1845kg

1.5 TSI EVO 150	148	125	9.7	35.3-37.2	TBC
2.0 TSI 4Drive 190	188	131	8.0	29.7-31.0	TBC

2.0 TDI 150	148	126	9.8	37.2-47.1	TBC
2.0 TDI 4Drive 150	148	123	9.8	37.2-39.8	TBC
2.0 TDI 4Drive 190	188	130	8.0	37.2-38.2	TBC

SKODA

Citigo 3dr hatch £8890–£11,890 ★★★½☆
A Czech take on the city car is more fun to drive than its plain-Jane exterior suggests. **LxWxH** 3597x1641x1478 **Kerb weight** 854kg

1.0 MPI 60 GreenTech	59	100	13.9	54.3-55.4	115-118
1.0 MPI 75 GreenTech	74	107	13.1	53.3	119-120

Fabia 5dr hatch £12,260–£18,835 ★★★½☆
Comfortable, affordable, easy-to-drive and attractive, but no more so than its rivals. **LxWxH** 4009x1958x1452 **Kerb weight** 1151kg

1.0 MPI 60	58	98	16.6	50.4	127
1.0 MPI 75	73	104	14.9	48.7-49.6	128-130
1.0 TSI 95	94	114	10.8	50.4-51.3	124-127
1.0 TSI 110	108	121	9.6	49.6-51.4	125-128
1.0 TSI 110 DSG	108	120	10.1	47.1-47.9	133-136

Fabia Estate 5dr estate £14,160–£19,070 ★★★★☆
Far more practical, majoring on boot space while doing what a good Skoda should. **LxWxH** 4271x1958x1473 **Kerb weight** 1182kg

1.0 MPI 75	74	105	15.2	49.6	128-130
1.0 TSI 95	94	115	10.9	50.4-51.4	124-128
1.0 TSI 110	108	122	9.7	49.6-51.4	125-129
1.0 TSI 110 DSG	108	121	10.2	47.1-47.9	134-136

Scala 5dr hatch £18,595–£23,315 ★★★★☆
Undercuts rivals on price and ushers in a sharp new design language for Skoda. **LxWxH** 4362x1793x1471 **Kerb weight** 1381kg

1.0 TSI 115	113	125	9.8	44.8-49.6	TBC
1.5 TSI 150	148	136	8.2	40.9-45.6	TBC
1.6 TDI 115	113	124-125	10.1-10.3	49.6-57.7	TBC

Octavia 5dr hatch £18,315–£31,170 ★★★★☆
Does comfort and practicality like no other. Good, frugal engines too. **LxWxH** 4670x1814x1461 **Kerb weight** 1225kg

1.0 TSI 115	113	126	9.6-9.7	45.6-50.4	126-141
1.4 TSI 150	148	136	7.8-7.9	44.1-48.7	132-145
2.0 TSI 190	188	147	7.3	40.9	155-156
2.0 TSI 245 vRS	241	155	6.4	38.2-38.7	165-168
1.6 TDI 115	113	126	9.8	53.3-58.9	126-139
2.0 TDI 150	148	135	8.1	53.3-56.5	132-139
2.0 TDI 184 vRS	182	142-145	7.6-8.1	44.8-50.4	146-164

Octavia Estate 5dr estate £19,515–£31,495 ★★★★☆
Class-leading amount of space and practicality. Comfortable, too. **LxWxH** 4667x1814x1465 **Kerb weight** 1247kg

1.0 TSI 115	113	124-125	9.8	42.8-48.7	131-149
1.5 TSI 150	148	134	7.9-8.0	42.8-46.3	137-149
2.0 TSI 190	188	143	7.4	35.3-39.8	160-182
2.0 TSI 245 vRS	241	155	6.5	37.1-38.2	168-172
1.6 TDI 115	113	124-125	9.8-9.9	51.4-56.5	131-144
2.0 TDI 150	148	132-134	8.2-8.3	52.8-53.3	140-149
2.0 TDI 150 4x4	148	130	8.1	47.9-51.4	143-153
2.0 TDI 150 4x4 Scout	148	129	8.8	44.8	164
2.0 TDI 184 vRS	182	135-140	7.7-8.2	43.5-49.6	151-170

Superb 5dr hatch £23,905–£38,365 ★★★★☆
Another great Czech value option that's big on quality and space if not on price. **LxWxH** 4861x1864x1468 **Kerb weight** 1340kg

1.5 TSI 150	148	137	8.3-8.5	40.9-45.6	141-157
2.0 TSI 190	188	148	7.7	35.3-38.2	TBC
2.0 TSI 272 4X4	270	155	5.5	32.8	194
1.6 TDI 120	118	128	10.5-10.6	52.3	142
2.0 TDI 150	148	135-137	8.5-8.6	50.4-52.3	140-146
2.0 TDI 190	187	145	8.3	50.4	147
2.0 TDI 190 4X4	187	143	8.0	44.8	166

Superb Estate 5dr estate £25,185–£39,965 ★★★★☆
Even more commendable than above, primarily thanks to its enormous boot. **LxWxH** 4856x1864x1477 **Kerb weight** 1365kg

1.5 TSI 150	148	135	8.4-8.6	39.2-43.5	146-163
2.0 TSI 190	188	142	7.7	35.3-37.7	TBC
2.0 TSI 272 4X4	270	155	5.6	32.5	197-198
1.6 TDI 120	118	127-128	10.6-10.7	49.6	148-150
2.0 TDI 150	148	132-135	8.6-8.8	49.6-52.3	142-150
2.0 TDI 190	187	TBC	TBC	48.7	151-152
2.0 TDI 190 4X4	187	142	7.4	43.5	170-171

Kamiq 5dr SUV £17,700–£25,130 ★★★½☆
Skoda's supermini platform has birthed a practical but predictable compact crossover. **LxWxH** 4241x1793x1553 **Kerb weight** 1251kg

1.0 TSI 70	94	112	11.1

GREATEST ROAD TESTS OF ALL TIME

MITSUBISHI EVO VI — TESTED 24.3.99

Mitsubishi's rally-bred four-wheel-drive Evo may not have been pretty, but its massive amounts of grip and superb handling made it the quickest thing point to point we'd ever tested.

It wasn't just a superb chassis that made the Evo VI one of the quickest things ever cross-country: the car was brimmed with technology to ensure all of its 276bhp – or more like 300bhp-plus – was transmitted to the road.

A super-sophisticated four-wheel drive system and electric active yaw control kept lairy sideways antics to a minimum and seemingly turned the cars grip levels up to 11. The Evo's handling could humble a supercar in the dry and truly embarrass it in the wet – thanks to its brilliant traction – but its ride was granite-hard. Brembo brakes that bit hard made sure all the extra speed carried out of a corner and down the next straight could be scrubbed off in time before the next turn-in point.

Although the Evo had a super driving position and was ergonomically fantastic inside, it could never be called stylish. Build quality was typically Japanese but the quality of materials inside the VI made it feel horribly tinny and lacking integrity.

FOR Massive performance, huge grip, brilliant handling
AGAINST Boxy looks, high insurance, tinny feel

FACTFILE

Price £31,940 **Engine** 4 cyls in line, 1997cc, turbocharged, petrol **Power** 276bhp at 6500rpm **Torque** 274lb ft at 3000rpm **0-60mph** 4.4sec **0-100mph** 11.2sec **Standing quarter mile** 13.3sec, 108mph **50-0mph** na **60-0mph** na **70-0mph** na **Top speed** 150mph **Economy** 23.1mpg

WHAT HAPPENED NEXT...

A number of special-edition Evo VIs were produced by Ralliart, which prepared Mitsubishi's World Rally Championship cars. They included a lightened 330bhp RS Sprint and a Tommi Mäkinen edition, to commemorate the Finnish driver's WRC victory, that featured a quicker steering rack and a lower ride height. After that, VII followed VI and the Evo gained a third, centre differential to further improve power delivery.

	Power (bhp)	Top speed (mph)	0-60/62mph	Economy (mpg)	CO_2 (g/km)
SMART					
Fortwo 3dr hatch/open £21,195–£23,930 ★★★☆☆					
Pricey, EV-only two-seater has urban appeal but is short on performance. **LxWxH** 2695x1663x1555 **Kerb weight** 1085kg					
Electric Drive	79	81	11.5-11.8	TBC	0
Forfour 5dr hatch £21,690–£22,285 ★★★☆☆					
Four doors give the Smart more mainstream practicality. Still expensive, though. **LxWxH** 3495x1665x1554 **Kerb weight** 1200kg					
Electric Drive	79	81	12.7	TBC	0
SSANGYONG					
Tivoli 5dr SUV £14,495–£21,495 ★★★½☆					
Trails the Duster as the best-value small crossover – but not by much. **LxWxH** 4195x1795x1590 **Kerb weight** 1270kg					
1.6 128	126	99-106	11.0-12.0	35.3-38.2	TBC
1.6d 115	113	107-109	12.0	45.3-54.3	TBC
Tivoli XLV 5dr SUV £19,745–£22,245 ★★★½☆					
Now grown in size for more practicality but that doesn't increase the Tivoli's appeal. **LxWxH** 4440x1798x1635 **Kerb weight** 1405kg					
1.6 128	126	99-106	11.0-12.0	34.9-37.2	TBC
1.6d 115	113	107-109	12.0	42.8-51.4	TBC
Korando 5dr SUV £19,995–£31,995 ★★★☆☆					
Competitive towing capabilities and generous kit, but still lacks dynamics. **LxWxH** 4450x1870x1629 **Kerb weight** 1610kg					
1.5 GDI-Turbo	161	118-120	12.0	TBC	TBC
1.6L 2WD	133	112	12.0	48.7	TBC
1.6L 4WD	133	112	12.0	43.5	TBC
Musso 5dr SUV £25,131–£35,031 ★★★☆☆					
Practical pick-up has a refined engine and direct steering, but ride needs refinement. **LxWxH** 5095x1950x1840 **Kerb weight** 2155kg					
2.2d 181	178	115-121	12.2	TBC	TBC
Rexton 5dr SUV £28,995–£38,995 ★★★½☆					
A vast improvement. Better on the road but without ditching its argicultural roots. **LxWxH** 4850x1960x1825 **Kerb weight** 2102kg					
2.2d 181	178	115	11.3-11.9	TBC	TBC
Turismo 5dr MPV £21,495–£27,995 ★★★☆☆					
Incredibly ungainly but offers huge real estate for the money. **LxWxH** 5130x1915x1850 **Kerb weight** 2115kg					
2.2d 178	175	108-116	TBC	TBC	TBC
SUBARU					
Impreza 5dr hatch £24,310–£25,010 ★★★☆☆					
Appealing hatchback has been steadily improved but still feels old-fashioned. **LxWxH** 4415x1740x1465 **Kerb weight** 1374kg					
1.6i	112	112	12.4	35.9	TBC
2.0i	153	127	9.8	TBC	TBC
Levorg 5dr estate £30,010 ★★★☆☆					
Impressively practical but only offered with an automatic gearbox and one trim. **LxWxH** 4690x1780x1490 **Kerb weight** 1568kg					
1.6i	167	130	8.9	TBC	TBC
XV 5dr SUV £25,310–£28,510 ★★★☆☆					
No-nonsense crossover doesn't quite make enough sense. **LxWxH** 4450x1780x1615 **Kerb weight** 1355kg					
1.6i	112	109	13.9	35.3	TBC
2.0i	154	120	10.4	TBC	TBC
Forester 5dr estate £30,000–£32,500 ★★★☆☆					
Solid, spacious and wilfully unsexy. A capable 4x4 nonetheless. **LxWxH** 4610x1795x1735 **Kerb weight** 1488kg					
2.0i 150	148	118-119	10.6-11.8	32.2	TBC
Outback 5dr estate £29,995–£33,010 ★★½☆☆					
Acceptable in isolation but no class leader. **LxWxH** 4815x1840x1605 **Kerb weight** 1612kg					
2.5i	172	130	10.2	33.0	TBC
BRZ 2dr coupé £27,025–£28,510 ★★★★★					
The GT86's half-brother looks great in Subaru blue. Cheaper, too. **LxWxH** 4240x1775x1320 **Kerb weight** 1242kg					
2.0i	197	130-140	7.6-8.2	33.3	TBC
SUZUKI					
Celerio 5dr hatch £8999–£10,499 ★★★½☆					
Pleasing to drive, cheap to buy and decent to sit in. No-nonsense and likeable for it. **LxWxH** 3600x1600x1540 **Kerb weight** 835kg					
1.0 K10C Dualjet	66	96	13.0	58.8	TBC
Ignis 5dr hatch £11,849–£14,849 ★★★★☆					
Cute and rugged-looking 4x4 city car capable of tackling roads bereft of asphalt. **LxWxH** 3700x1660x1595 **Kerb weight** 855kg					
1.2 Dualjet	87	106	11.8	52.9	TBC
1.2 Dualjet SHVS	87	106	11.4	54.1	TBC
1.2 Dualjet SHVS 4x4	87	103	11.1	54.1	TBC
Jimny 3dr SUV £15,499–£17,999 ★★★½☆					
Charming 4x4 is capable and affordable but retains its dynamic foibles. **LxWxH** 3645x1645x1725 **Kerb weight** 1135kg					
1.5 VVT	100	90	11.9	32.2-35.8	178-198
Swift 5dr hatch £12,499–£18,499 ★★★½☆					
Given mature looks, more equipment and a hybrid powertrain, but it's no class leader. **LxWxH** 3840x1735x1495 **Kerb weight** 890kg					
1.2 Dualjet	87	111	11.9	55.4	115
1.2 Dualjet SHVS 4x4	87	105	12.6	49.7	128
1.0 Boosterjet	108	118-121	10.0-10.6	49.6-51.8	123-136
1.4 Boosterjet Sport	138	130	8.1	47.1	135
Baleno 5dr hatch £13,249–£16,249 ★★★½☆					
Suzuki's family-sized hatchback makes use of clever little engines. **LxWxH** 3995x1745x1470 **Kerb weight** 920kg					
1.0 Boosterjet	108	118-124	11.0-11.4	46.8-52.4	TBC
Vitara 5dr SUV £16,999–£25,649 ★★★½☆					
Utterly worthy addition to the class drives better than most. **LxWxH** 4175x1775x1610 **Kerb weight** 1075kg					
1.0 Boosterjet	108	111	11.5-12.5	39.4-45.9	139-162
1.4 Boosterjet	136	124	9.5-10.2	36.6-43.6	146-174
S-Cross 5dr SUV £17,499–£26,099 ★★★½☆					
A worthy crossover if not a class leader. Refreshed looks give a lease of life. **LxWxH** 4300x1785x1585 **Kerb weight** 1160kg					
1.0 Boosterjet	108	106-112	11.0-12.4	404-44.9	120-131
1.0 Boosterjet Allgrip	108	109	12.0	39.2	127
1.4 Boosterjet Allgrip	136	124	10.2	37.7-38.8	141
TESLA					
Model S 5dr hatch £82,190–£96,790 ★★★★½					
Large range makes it not only a standout EV but also the future of luxury motoring. **LxWxH** 4978x1963x1445 **Kerb weight** 2108kg					
Long range	602	155	4.1	TBC	0
Performance	602	155	2.4	TBC	0
Model 3 4dr saloon £42,990–£56,490 ★★★★☆					
Lowest-price, biggest-volume Tesla yet arrives in the UK after wooing the US. **LxWxH** 4694x1849x1443 **Kerb weight** 1726kg					
Standard range plus	235	140	5.3	TBC	0
Long range	346	145	4.4	TBC	0
Performance	449	162	3.2	TBC	0
Model X 5dr SUV £87,190–£101,390 ★★★★½					
A genuine luxury seven-seat electric SUV which also has a large range. **LxWxH** 5036x2070x1684 **Kerb weight** 2459kg					
Long range	602	155	4.7	TBC	0
Performance	602	155	2.8	TBC	0
TOYOTA					
Aygo 3dr hatch £9695–£14,595 ★★★☆☆					
Impactful styling does a lot to recommend it, but not as refined nor as practical as some. **LxWxH** 3455x1615x1460 **Kerb weight** 840kg					
1.0 VVT-i	71	99	13.8	45.8-57.7	TBC
Yaris 5dr hatch £13,515–£26,295 ★★★½☆					
Stylish interior but ultimately a scaled-down version of bigger Toyotas. **LxWxH** 3495x1695x1510 **Kerb weight** 975kg					
1.0 VVT-i	67	96	15.3	61.1-61.4	TBC
1.5 VVT-i	108	108	11.0-11.2	54.3-57.6	TBC
1.5 VVT-i Hybrid	71	102	11.8	67.3-76.3	TBC
1.8 VVT-i GRMN	206	143	6.3	TBC	TBC
C-HR 5dr SUV £21,880–£29,170 ★★★★☆					
Coupé-shaped crossover certainly turns heads and impresses on the road. **LxWxH** 4360x1795x1565 **Kerb weight** 1320kg					
1.2 Turbo	112	114-118	10.9-11.1	39.7-41.5	TBC
1.2 Turbo AWD	112	111	11.4	34.0-34.4	TBC
1.8 VVT-i Hybrid	119	105	11.0	55.3-57.6	TBC
Corolla 5dr hatch £21,300–£30,340 ★★★★☆					
Rebranded hatch has rolling refinement, interior ambience and affable handling. **LxWxH** 4370x1790x1435 **Kerb weight** 1340kg					
1.2 VVT-i	114	124	9.3	39.2-44.8	128-132
1.8 VVT-i Hybrid	122	111	10.9	55.3-62.7	76-83
2.0 VVT-i Hybrid	180	111	7.9	50.4-54.2	89
Corolla Sports Tourer 5dr estate £22,575–£30,345 ★★★★☆					
More practical estate bodystyle proves just as capable with hybrid power. **LxWxH** 4650x1790x1435 **Kerb weight** 1440kg					
1.2 VVT-i	114	124	9.6	41.5-44.1	128-132
1.8 VVT-i Hybrid	122	111	11.1	57.6-62.7	76-83
2.0 VVT-i Hybrid	180	111	8.1	53.2	89
RAV4 5dr SUV £29,635–£36,640 ★★★☆☆					
A solid option but ultimately outgunned by Korean competition. **LxWxH** 4605x1845x1675 **Kerb weight** 1605kg					
2.5 Hybrid	194	112	8.4	48.7-50.4	TBC
2.5 Hybrid AWD	194	112	8.4	47.8-48.7	TBC
Land Cruiser 5dr SUV £34,690–£54,040 ★★★½☆					
A real go-anywhere vehicle. Totally rugged and available with seven seats. **LxWxH** 4335x1885x1875 **Kerb weight** 2010kg					
2.8 D-4D	171	109	12.1-12.7	27.4-31.0	TBC
GT86 2dr coupé £27,285–£31,795 ★★★★½					
Almost the most fun you can have on a limited budget. Splendid. **LxWxH** 4240x1775x1320 **Kerb weight** 1247kg					
2.0i	197	130-140	7.6-8.2	32.8-33.2	TBC
GR Supra 2dr coupé £52,695–£54,000 ★★★★☆					
Brings welcome muscle, fun and variety to the affordable sports car class. **LxWxH** 4379x1292x1854 **Kerb weight** 1541kg					
3.0i	335	155	4.3	34.5	TBC
Prius 5dr hatch £24,245–£28,350 ★★★★☆					
Better all round compared with its predecessors. Challenging looks, though. **LxWxH** 4540x1760x1470 **Kerb weight** 1375kg					
1.8 VVT-i Hybrid	120	112	10.6	60.1-61.4	TBC
Prius Plug-in Hybrid 5dr hatch £31,695–£33,895 ★★★★☆					
Plug-in version is clever and appealing. Seems more comfortable in its skin. **LxWxH** 4645x1760x1470 **Kerb weight** 1530kg					
1.8 VVT-i Hybrid	120	101	11.1	235.4	TBC
Prius+ 5dr MPV £27,830–£30,175 ★★★☆☆					
Expensive, old and ugly variant of the Prius, but can carry seven. **LxWxH** 4645x1775x1575 **Kerb weight** 1500kg					
1.8 VVT-i Hybrid	132	103	11.3	47.0-48.7	TBC
VAUXHALL					
Adam 3dr hatch £13,850–£15,700 ★★★☆☆					
Certainly looks the part, but there are better superminis ahead of it. **LxWxH** 3698x1720x1484 **Kerb weight** 1101kg					
1.2i 70	69	103	14.9	43.5-44.1	TBC
Corsa 3dr/5dr hatch £11,730–£19,735 ★★★½☆					
Refined, stylish and practical, but its engines aren't so good. **LxWxH** 4021x1736x1479 **Kerb weight** 1141kg					
1.4i 75	74	101	15.5	42.2-43.5	TBC
1.4i 90	88	109	13.2	38.2-42.8	TBC
1.4i Turbo 100	98	115	11.0	42.8-43.5	TBC
1.4i Turbo 150	148	129	8.9	40.4-42.2	TBC
Astra 5dr hatch £18,900–£26,030 ★★★★☆					
Good handling and nice engines, but its working-class roots still show through. **LxWxH** 4370x1809x1485 **Kerb weight** 1244kg					
1.0i Turbo 105	103	121	10.5	45.6-47.9	TBC
1.4i Turbo 125	123	127	8.6	43.5-45.6	TBC
1.4i Turbo 150	148	134	7.8	38.2-44.1	TBC
1.6 CDTi 110	108	124	10.2	55.4-58.9	TBC
1.6 CDTi 136	134	127	9.0	48.7-57.6	TBC
Astra Sports Tourer 5dr estate £20,350–£24,680 ★★★★☆					
More composed and practical than the hatchback. **LxWxH** 4702x1809x1510 **Kerb weight** 1273kg					
1.0i Turbo 105	103	121	11.0	45.6-47.9	TBC
1.4i Turbo 125	123	127	9.0	43.5-45.6	TBC
1.4i Turbo 150	148	134	8.2	37.7-44.1	TBC
1.6 CDTi 110	108	121	10.7	54.3-58.9	TBC
1.6 CDTi 136	134	127	9.5	47.9-57.6	TBC
Insignia Grand Sport 5dr hatch £19,940–£37,620 ★★★★☆					
The good-looking and tech-filled Insignia makes an attractive proposition. **LxWxH** 4897x1863x1455 **Kerb weight** 1714kg					
1.5 Turbo 140	138	130	9.3	42.8-44.1	TBC
1.5 Turbo 165	162	138	8.4	38.7-44.1	TBC
1.6 Turbo 200	198	146	7.2	36.7-39.8	TBC
1.6 Turbo D 110	108	127	10.9	55.4-57.6	TBC
1.6 Turbo D 136	134	126-131	9.9-10.2	47.1-54.3	TBC
2.0 Turbo D 170	167	139-140	8.2-8.4	43.5-51.4	TBC
2.0 BiTurbo D 210 4x4	207	144	7.4-7.5	36.7	TBC
Insignia Sports Tourer 5dr estate £21,500–£39,120 ★★★★☆					
The practical version of the Insignia that aims to take the fight to premium rivals. **LxWxH** 4986x1863x1514 **Kerb weight** 1487kg					
1.5 Turbo 140	138	129	9.6	40.9-42.8	TBC
1.5 Turbo 165	162	135	8.6	37.7-42.8	TBC
1.6 Turbo 200	198	144	7.4	36.2-39.2	TBC
1.6 Turbo D 110	108	125	111.1	53.3-55.4	TBC
1.6 Turbo D 136	134	127-132	10.1-10.5	46.3-52.3	TBC
2.0 Turbo D 170	167	137-139	8.4-8.6	42.2-49.6	TBC
2.0 BiTurbo D 210 4x4	207	144	7.4-7.5	36.2-36.7	TBC
Crossland X 5dr SUV £17,710–£23,080 ★★★½☆					
Vauxhall's small SUV is competent enough but lacks any real character. **LxWxH** 4212x1765x1605 **Kerb weight** 1245kg					
1.2i 83	81	105	14.0	42.2-44.1	TBC
1.2i Turbo 110	108	117	10.6	39.8-46.3	TBC
1.2i Turbo 130	128	128	9.1	42.2-44.1	TBC
1.5 Turbo D 102	101	111	9.9	55.4-58.9	TBC
Mokka X 5dr SUV £20,640–£25,840 ★★★½☆					
Compact and competent but lacks any persuasive qualities. **LxWxH** 4275x1780x1658 **Kerb weight** 1394kg					
1.4 Turbo 140	138	119-122	9.3-10.1	34.4-36.7	TBC
1.4 Turbo 140 4x4	138	116	9.3	34.4-39.2	TBC
1.6 CDTi 136	134	117-118	9.3-10.3	43.5-50.4	TBC
Grandland X 5dr SUV £23,410–£34,930 ★★★☆☆					
Does well to disguise its 3008 roots but too bland to stand out in a congested segment. **LxWxH** 4477x1811x1630 **Kerb weight** 1350kg					
1.2 Turbo 130	128	117	10.9-11.1	37.7-42.8	TBC
1.5 Turbo D 130	128	116	11.3	49.6-53.3	TBC
2.0 Turbo D 177	175	133	9.1	42.8-45.6	TBC

whatcar.com

WHAT CAR?

makes buying a new car online easy

Just follow these three steps:

pick.
Pick your perfect car, helped by clear, simple buying advice and independent reviews from our in-house experts.

shop.
Shop our network of approved dealers anonymously, and enjoy guaranteed Target Price savings.

drive.
Drive away happy, knowing you've paid the right price for the right car without any awkward haggling.

Combo Life 5dr MPV £20,130–£22,230 ★★★½☆
Van-based people carrier is usable, spacious and practical, if not very pretty to look at. **LxWxH** 4403x1841x1921 **Kerb weight** 1430kg

	Power (bhp)	Top speed (mph)	0-60/62mph	Economy (mpg)	CO_2 (g/km)
1.2 Turbo 110	108	109	11.9	38.2-40.9	TBC
1.5 Turbo D 100	99	107	12.7	42.8-47.9	TBC
1.5 Turbo D 130	128	115	10.6	47.1-49.6	TBC

VOLKSWAGEN

Up 3dr/5dr hatch £9825–£23,650 ★★★★☆
It's no revolution, but VW's hallmarks are in abundance. **LxWxH** 3600x1428x1504 **Kerb weight** 926kg

1.0 60	59	100	14.4	53.3-54.3	TBC
1.0 75	74	106	13.2-13.5	51.4-53.3	TBC
1.0 90	88	114	9.9	54.3-55.4	TBC
1.0 115	113	119	8.8	49.6-50.4	TBC
e-Up	81	80	12.4	TBC	0

Polo 5dr hatch £14,330–£23,155 ★★★★☆
A thorough going-over makes it more mature, but the Polo is still a bit boring. **LxWxH** 4053x1946x1461 **Kerb weight** 1105kg

1.0 65	64	102	15.5	47.1-48.7	TBC
1.0 80	78	106	15.4	46.3-48.7	TBC
1.0 TSI 95	93	116	10.8	44.8-52.3	TBC
1.0 TSI 115	113	124	9.5	44.8-49.6	TBC
2.0 TSI GTI 200	197	147	6.7	38.7-39.8	TBC
1.6 TDI 80	79	109	12.9	53.3-55.4	TBC
1.6 TDI 95	93	115	10.8	53.3-55.4	TBC

Golf 3dr/5dr hatch £18,765–£35,635 ★★★★½
Does exactly what everyone expects. Still the king of the family car. **LxWxH** 4258x1790x1492 **Kerb weight** 1206kg

1.0 TSI 85	83	112	11.9	48.7-50.4	TBC
1.0 TSI 115	113	123	9.8	41.5-57.6	TBC
1.5 TSI EVO 130	128	130	9.1	44.1-46.3	TBC
1.5 TSI EVO 150	148	134	8.3	42.2-45.6	TBC
2.0 TSI 245 GTI Performance	241	154-155	6.2	36.7-37.7	TBC
2.0 TSI 300 4Motion R	296	155	4.6-5.1	32.5-32.8	TBC
1.6 TDI 115	113	123	10.2-10.5	50.4-55.4	TBC
2.0 TDI 150	148	133-134	8.6	50.4-52.3	TBC
2.0 TDI 184 GTD	181	143-144	7.4-7.5	48.7-52.3	TBC
e-Golf	134	93	9.6	TBC	0

Golf Estate 5dr estate £21,345–£36,835 ★★★★½
Practical load-lugging estate doesn't erode the well-rounded Golf package. **LxWxH** 4567x1799x1515 **Kerb weight** 1295kg

1.0 TSI 115	108	TBC	TBC	41.5-44.8	TBC
1.5 TSI EVO 130	128	131	9.5	43.5-47.1	TBC
1.5 TSI EVO 150	148	135	8.7	41.5-44.8	TBC
2.0 TSI 300 4Motion R	296	155	4.8	32.5-32.8	TBC
1.6 TDI 115	113	124	10.7	49.6-57.6	TBC
2.0 TDI 150	148	134-135	8.9	50.4-52.3	TBC
2.0 TDI 184 GTD	181	143-144	7.8-7.9	47.9-49.6	TBC

Golf SV 5dr MPV £21,000–£29,320 ★★★★☆
Probably the least appealing member of the Golf family but still resolute. **LxWxH** 4338x2050x1578 **Kerb weight** 1335kg

1.0 TSI 85	83	110	13.0	47.1-47.9	TBC
1.0 TSI 115	113	119	11.3	41.5-43.5	TBC
1.5 TSI EVO 130	128	126	9.6	41.5-45.6	TBC
1.5 TSI EVO 150	148	132	8.8	40.9-42.8	TBC
1.6 TDI 115	113	119	11.0	48.7-55.4	TBC
2.0 TDI 150	148	130	9.2	49.6-52.3	TBC

Passat 4dr saloon £23,495–£33,575 ★★★★☆
Lands blows on rivals with its smart looks, civilised refinement, quality and usability. **LxWxH** 4767x2083x1476 **Kerb weight** 1367kg

1.5 TSI EVO 150	148	135	8.6	43.5-47.1	TBC
1.6 TDI 150	148	135	8.9	49.6-53.3	TBC
2.0 TDI 190	188	146	8.1	49.6-50.4	TBC

Passat Estate 5dr estate £25,095–£35,175 ★★★★☆
All the Passat's redeeming features in spacious, practical estate form. **LxWxH** 4767x2083x1516 **Kerb weight** 1395kg

1.5 TSI EVO 150	148	135	8.6	38.7-44.8	TBC
1.6 TDI 150	148	135	8.9	49.6-53.3	TBC
2.0 TDI 190	188	146	8.1	47.9-51.4	TBC

Arteon 4dr saloon £33,320–£40,425 ★★★½☆
VW's flagship saloon is well-made and luxurious but rather bland to drive. **LxWxH** 4862x1871x1450 **Kerb weight** 1505kg

1.5 TSI EVO 150	148	137	8.9	39.2-40.4	TBC
2.0 TSI 190	187	149	7.5	TBC	TBC
2.0 TSI 272 4Motion	270	155	5.6	32.5-33.2	TBC
2.0 TDI 150	148	137	9.1	49.6-52.3	TBC
2.0 TDI 190	187	148	8.0	48.7-50.4	TBC
2.0 TDI 190 4Motion	187	145	7.8	43.5-44.8	TBC
2.0 BiTDI 240 4Motion	236	152	6.5	TBC	TBC

Touran 5dr MPV £24,045–£30,870 ★★★★☆
Dull overall, but it's a capable MPV, well-made and hugely refined. **LxWxH** 4527x1829x1659 **Kerb weight** 1436kg

1.0 TSI 115	113	119	11.3	39.2-41.5	TBC
1.5 TSI EVO 150	148	130	8.9	37.2-39.8	TBC
1.6 TDI 115	113	118	11.4	47.9-51.4	TBC
2.0 TDI 150	148	128-129	9.3	TBC	TBC

Sharan 5dr MPV £29,115–£39,350 ★★★★½
Full-sized seven-seater offers versatility, space, VW desirability and tidy handling. **LxWxH** 4854x1904x1720 **Kerb weight** 1703kg

1.4 TSI 150	148	123-124	9.9	31.4-35.8	TBC
2.0 TDI 115	113	114	12.6	TBC	TBC
2.0 TDI 150	148	123-124	10.3	39.8-43.5	TBC
2.0 TDI 177	175	132-136	8.9	39.8-40.4	TBC

T-Cross 5dr SUV £16,995–£26,740 ★★★★½
Compact crossover delivers a classy, substantial feel on UK roads. **LxWxH** 4108x1760x1584 **Kerb weight** 1270kg

1.0 TSI 95	93	112	11.5	46.3-47.9	TBC
1.0 TSI 115	113	120	10.2	43.5-45.6	TBC
1.6 TDI 95	93	111	11.9	49.6-53.3	TBC

T-Roc 5dr SUV £19,270–£31,050 ★★★★☆
VW's junior SUV is beguiling and sophisticated. It drives rather well, too. **LxWxH** 4234x1992x1573 **Kerb weight** 1270kg

1.0 TSI 115	113	116	10.1	43.5-44.8	TBC
1.5 TSI EVO 150	148	127	8.3	38.7-42.2	TBC
1.5 TSI EVO 150 4Motion	148	127	8.4	34.0-34.9	TBC
2.0 TSI 190 4Motion	187	134	7.2	34.0-34.4	TBC
1.6 TDI 115	113	116	10.3	49.6-50.4	TBC
2.0 TDI 150	148	124	8.6	48.7-50.4	TBC
2.0 TDI 150 4Motion	148	124	8.7	45.6-46.3	TBC

Tiguan 5dr SUV £23,990–£38,790 ★★★★☆
An improvement on the previous model and will continue to sell by the bucket load. **LxWxH** 4486x1839x1654 **Kerb weight** 1490kg

1.5 TSI EVO 130	128	119	10.2	39.8-40.9	TBC
1.5 TSI EVO 150	148	124	9.2	36.7-38.2	TBC
2.0 TSI 190 4Motion	188	131	7.9	39.2-42.8	TBC
2.0 TSI 230 4Motion	228	142	6.3	29.7-30.4	TBC
2.0 TDI 150	148	125-127	9.3	44.8-47.9	TBC
2.0 TDI 150 4Motion	148	124-125	9.3	39.2-42.2	TBC
2.0 TDI 190 4Motion	187	131	7.9	38.7-39.2	TBC

Tiguan Allspace 5dr SUV £30,095–£41,040 ★★★★☆
Has all the Tiguan's sensibility and refinement, now with the bonus of seven seats. **LxWxH** 4486x1839x1654 **Kerb weight** 1490kg

1.5 TSI EVO 150	148	123	9.5	35.3-35.8	TBC
2.0 TSI 190 4Motion	188	130	7.9	TBC	TBC
2.0 TDI 150	148	124-126	9.8	43.5-44.1	TBC
2.0 TDI 150 4Motion	148	123-124	9.9	38.2-38.7	TBC
2.0 TDI 190 4Motion	187	130	8.6	38.2-38.7	TBC

Touareg 5dr SUV £49,095–£58,295 ★★★★☆
Hints of ritziness and sportiness don't impinge on this functional luxury SUV's appeal. **LxWxH** 4878x2193x1717 **Kerb weight** 1995kg

3.0 V6 TSI 340	335	155	5.9	24.6-25.9	TBC
3.0 V6 TDI 231	228	135	7.5	33.2-34.9	TBC
3.0 V6 TDI 286	282	148	6.1	32.8-34.9	TBC

VOLVO

V40 5dr hatch £23,995–£29,820 ★★★★☆
Not perfect, but handsome, well-packaged, pragmatic and likeable. **LxWxH** 4370x2041x1470 **Kerb weight** 1417kg

2.0 D2	116	118	10.5	47.9-56.5	TBC
2.0 D3	145	130	8.4	47.1-55.4	TBC
2.0 T2	119	118	9.8	38.2-42.8	TBC
2.0 T3	148	130	8.3	37.2-42.8	TBC

V40 Cross Country 5dr hatch £28,070–£29,819 ★★★★☆
Handsome hatchback gets a rugged makeover but loses some of its likeable nature. **LxWxH** 4369x2041x1439 **Kerb weight** 1428kg

2.0 D3	145	118	8.5	47.9-55.4	TBC
2.0 T3	148	130	8.5	37.2-40.9	TBC

S60 4dr saloon £37,935–£56,105 ★★★★☆
Fresh-faced saloon now sits comfortably among the ranks of its German peers. **LxWxH** 4761x1916x1437 **Kerb weight** 1616kg

2.0 T5	248	145	6.5	35.3-39.8	152-155
2.0 T8 TwinEngine	390	155	4.6	122.8-176.5	42
2.0 T8 Polestar Engineered	399	155	4.4	104.5	48

V60 5dr estate £32,410–£41,460 ★★★★½
Spacious and comfortable, with a characterful, Scandi-cool design. **LxWxH** 4761x1916x1427 **Kerb weight** 1729kg

2.0 D3	147	127	9.5	45.6-55.4	TBC
2.0 D4	187	137	7.6	46.3-55.4	TBC
2.0 T5	246	145	6.7	34.0-38.7	TBC

V60 Cross Country 5dr estate £38,270 ★★★★☆
Brings extra ride height, all-wheel drive and off-road body cladding. **LxWxH** 4784x1916x1499 **Kerb weight** 1792kg

2.0 D4	187	130	8.2	42.8-47.9	TBC

S90 4dr saloon £36,120–£58,555 ★★★★☆
Volvo's mid-sized exec majors on comfort, style and cruising ability. **LxWxH** 4963x2019x1443 **Kerb weight** 1665kg

2.0 T4	185	130	8.7	33.2-37.7	TBC
2.0 T5	248	140	6.8	33.2-37.7	TBC
2.0 D4	185	140	8.2	43.5-50.4	TBC
2.0 D5 PowerPulse AWD	228	145	7.0	39.2-43.5	TBC
2.0 T8 Twin Engine AWD	310	155	4.8	97.4-117.7	TBC

V90 5dr estate £38,120–£60,555 ★★★★☆
luxury estate takes on the 5 Series and the E-Class. Comfy and a good cruiser. **LxWxH** 4936x2019x1475 **Kerb weight** 1679kg

2.0 T4	185	130	8.9	33.2-37.7	TBC
2.0 T5	248	140	6.7	33.2-37.7	TBC
2.0 D4	185	140	8.5	43.5-50.4	TBC
2.0 D5 PowerPulse AWD	228	145	7.2	39.2-43.5	TBC
2.0 T8 Twin Engine AWD	310	155	4.8	97.4-117.7	TBC

V90 Cross Country 5dr estate £43,020–£57,935 ★★★★☆
Volvo's large comfy estate given a jacked-up, rugged makeover. **LxWxH** 4936x2019x1543 **Kerb weight** 1826kg

2.0 D4 AWD	185	130	8.8	40.4-43.5	TBC
2.0 D5 PowerPulse AWD	228	140	7.5	38.2-40.9	TBC
2.0 T5 AWD	250	140	7.4	30.4-32.5	TBC
2.0 T6 AWD	310	140	6.3	30.4-32.5	TBC

XC40 5dr SUV £29,910–£38,020 ★★★★☆
Volvo's take on the crossover aims to rival BMW, Mercedes and Audi. **LxWxH** 4425x1910x1658 **Kerb weight** 1626kg

T3	152	124	9.4	36.7-39.8	TBC
T4 AWD	185	130	8.5	32.8-35.3	TBC
T5 AWD	243	140	6.5	31.0-34.0	TBC
D3	145	124	9.8	44.1-51.4	TBC
D3 AWD	145	124	7.5	42.8-44.8	TBC
D4 AWD	185	130	7.9	39.8-44.1	TBC

XC60 5dr SUV £38,320–£60,670 ★★★½☆
Looks like a small XC90 and carries on where the old one left off. A good, capable cruiser. **LxWxH** 4688x1999x1658 **Kerb weight** 1781kg

2.0 D4 AWD	185	127	8.4	36.7-44.8	TBC
2.0 D5 PowerPulse AWD	228	137	7.2	35.3-40.4	TBC
2.0 T5 AWD	247	137	6.8	30.1-34.0	TBC
2.0 T8 Twin Engine	310	140	5.3	83.1-100.9	TBC

XC90 5dr SUV £51,860–£72,795 ★★★★☆
Clever packaging, smart styling, good to drive: Volvo's closest thing to a class-leader. **LxWxH** 4950x2008x1776 **Kerb weight** 1961kg

2.0 D5 PowerPulse AWD	228	137	7.8	34.0-36.7	TBC
2.0 T5 AWD	250	134	7.9	26.9-30.4	TBC
2.0 T6 AWD	310	143	6.5	26.2-28.8	TBC
2.0 T8 Twin Engine	310	140	5.6	74.3-83.1	TBC

VUHL

05 0dr open £59,995–£89,995 ★★★★☆
Mexican track-day special has a pleasingly pragmatic and forgiving chassis. **LxWxH** 3718x1876x1120 **Kerb weight** 725kg

2.0 DOHC Turbo	285	152	3.7	TBC	TBC
2.3 DOHC Turbo RR	385	158	2.7	TBC	TBC

WESTFIELD

Sport 2dr coupé £19,950–£35,800 ★★★★☆
Sport Turbo is very quick and fun but not a patch on the Caterhams. **LxWxH** TBC **Kerb weight** TBC

1.6 Sigma	135	TBC	TBC	TBC	TBC
1.6 Sigma	155	TBC	TBC	TBC	TBC
2.0 Duratec	200	TBC	TBC	TBC	TBC
2.0 Ecoboost	252	TBC	TBC	TBC	TBC

Mega 2dr coupé £14,999–£15,595 ★★★½☆
Mega engines make it rapid, but not as fun as Caterham's R range. **LxWxH** TBC **Kerb weight** TBC

1.3 Suzuki Hyabusa	177	136	3.0	TBC	TBC
2.0 VTEC S2000	240	TBC	TBC	TBC	TBC

ZENOS

E10 0dr coupé £26,995–£39,995 ★★★★½
The latest in a long line of mid-engined British marvels. Expect a dedicated following. **LxWxH** 3800x1870x1130 **Kerb weight** 700kg

2.0 Ecoboost S	250	145	4.0	TBC	TBC
2.3 Ecoboost R	350	155	3.0	TBC	TBC

WHAT'S COMING WHEN

Porsche 718 Boxster/Cayman GTS
On sale April, priced from £65,949
Introducing the flat-four motor that made its debut in the 718-generation Boxster and Cayman was probably Porsche's most controversial move in decades. It appears many customers agreed, as six-cylinder power has now returned to the non-Motorsport range in the form of the GTS 4.0. Enthusiasts will like the sound of a detuned naturally aspirated Cayman GT4 motor packing 395bhp and mated to a six-speed manual 'box.

FEBRUARY
Audi RS Q8, **Fiat** 500 Mild Hybrid, **Jaguar** F-Type facelift, **Kia** Ceed SW PHEV, Xceed PHEV, **Lotus** Evora GT 410, **McLaren** 620R, Speedtail, **Mini** Electric, **Peugeot** 3008 PHEV, 508 PHEV, 508 SW PHEV, **Renault** Captur, **Seat** Mii Electric, **Volkswagen** e-Up, Up facelift, Up GTI facelift

MARCH
Alpina B3, **BMW** 2 Series Gran Coupé, X5 M, X6 M, **Fiat** Panda Mild Hybrid, **Land Rover** Defender, **Mercedes-AMG** GLE 53, GLE 53 Coupé, **Skoda** Citigo-e iV, **Smart** EQ Forfour facelift, EQ Fortwo facelift, **Uniti** One, **Vauxhall** Corsa-e, **Volkswagen** T-Roc Cabriolet, **Volvo** XC40 PHEV

APRIL
Aston Martin DBX, **Mercedes-AMG** GLA 35, GLB 35, **Mercedes-Benz** GLA, **Polestar** 1, **Porsche** 718 Boxster GTS, 718 Cayman GTS, **Seat** Leon

MAY
Ford Kuga, **Hyundai** i20, i30 facelift, **Land Rover** Discovery Sport PHEV, Range Rover Evoque PHEV, **Mercedes-Maybach** GLS, **Mini** JCW GP, **Skoda** Octavia, **Vauxhall** Insignia facelift

JUNE
Aston Martin Valkyrie, **BMW** M2 CS, M8, **Citroën** C5 Aircross PHEV, **Ferrari** SF90 Stradale, **Honda** E, **Mercedes-AMG** GLS 63, **Polestar** 2, **Renault** Mégane facelift

JULY
Aston Martin Vantage Volante, **Audi** S3, **Chevrolet** Corvette, **Honda** Jazz, **Jaguar** F-Pace facelift, **Jeep** Gladiator, **Lamborghini** Sián FKP 37, **Lexus** LC Convertible, **Mercedes-AMG** GLE 63, GLE 63 Coupé, **Pininfarina** Battista, **Porsche** 911 Turbo, **Volkswagen** Golf GTE, ID 3

AUGUST
Alpina B8, **Audi** A3 Sportback, **Fiat** 500e, **Jaguar** XF facelift, **Jeep** Renegade PHEV, **Honda** Civic Type R facelift, **Kia** Sorento, **Lotus** Evija, **Mercedes-AMG** GT R Black Series, **Seat** Ateca facelift, **Volkswagen** Touareg R PHEV

SEPTEMBER
Audi A3 saloon, Q5 facelift, **Cupra** Leon PHEV, **Jaguar** E-Pace facelift, **Maserati** Ghibli facelift, Levante facelift, Quattroporte facelift, **Mercedes-AMG** GT 73 4-Door Coupé, **Mercedes-Benz** E-Class facelift, **Mitsubishi** Outlander PHEV, **Porsche** 718 Cayman GT4 RS, **Skoda** Octavia PHEV, **Toyota** RAV4 PHEV, Yaris, **Volkswagen** Golf GTD, Golf GTI, Golf R

OCTOBER
Audi A3 E-tron, RS3, **Cupra** Formentor, **DS** saloon, **Ferrari** Roma, **Ford** Mustang Mach-E, **Hyundai** Tucson, **Maserati** sports car, **Mercedes-Benz** CLA PHEV, **Mini** Countryman facelift, **Skoda** Octavia vRS, **Ssangyong** Korando EV, **Subaru** Levorg, **Volvo** XC40 Recharge

NOVEMBER
Alfa Romeo Tonale, **Alpina** XB7, **McLaren** 750LT, **Mercedes-Benz** S-Class, **MG** HS PHEV, **Porsche** Panamera facelift, **Seat** El-Born, **Tesla** Model Y, **Toyota** Corolla GR

DECEMBER
BMW iX3, **Citroën** C4 Cactus EV, **Ford** Puma ST, **McLaren** Elva, **Mercedes-Benz** EQA, **Porsche** 911 GT3, **Rolls-Royce** Ghost, **Tesla** Model S Plaid, **Toyota** GR Yaris, **Wiesmann** sports car

Matt Prior

TESTER'S NOTES

Campaigners for justice protest at RAF Croughton

She was once a CIA agent. That's what we learned last week about Anne Sacoolas, although it feels like we find out something else unsettling about the traffic collision she was involved in every week.

Sacoolas is the American charged with death by dangerous driving after allegedly crashing into and killing Harry Dunn, 19, who was riding his motorbike near RAF Croughton – a US military listening post near Brackley, Northamptonshire – last August.

Sacoolas reportedly exited the gates at Croughton and turned onto the wrong side of the road for long enough to collide with Dunn. We've also learned that it took 40 minutes for an ambulance to reach the scene. Harry later died in hospital.

At first, Sacoolas co-operated with the police, but after an initial interview, she claimed diplomatic immunity and fled the country.

What else have we learned? That the US military doesn't routinely train its UK-based personnel to drive here. When it does, incidents reduce by 50%. We've also learned that, as the prime minister conceded last week, the UK-US extradition treaty is skewed in favour of the US.

> "We should all have the grace and fortitude to be judged by the values for which we stand"

We've learned the US secretary of state, unprecedentedly, is disinclined to grant the UK's extradition request for Sacoolas, and that she won't return voluntarily. Her lawyer, astonishingly, claimed "a criminal prosecution with a potential penalty of 14 years' imprisonment is simply not a proportionate response", as if the UK's justice system, considered a paragon of fairness and rationality by the myriad of nations that modelled theirs on it, is cruel and deficient.

And we've discovered how this series of setbacks and revelations, which would break most of us, has exposed the extraordinary resolve of Dunn's family and their supporters. If the US has underestimated them (as I think president Donald Trump did when he met Harry's parents, only to tell them that Sacoolas was waiting in an adjoining room, in what the family described as an "ambush"), I think it has made a grave mistake.

As it stands, Dunn's family are still exploring options, including pushing for Sacoolas to be issued an Interpol 'red notice', which could lead to her arrest anywhere outside the US, or to be tried in her absence.

There's still disagreement between the family and Foreign Office over whether Sacoolas had, or was entitled to, diplomatic immunity – a vital tool for allowing government relations to function without malign interference from host nations. But it wasn't designed for incidents like this.

Perhaps I'm not impartial. I'm a motorcyclist, it's not two years since my friend Henry Hope-Frost was killed on his bike and my children were friends with Harry Dunn, who was very kind to them when we moved to the area. They tell me his friends still feel the injustice keenly.

We invite our allies to work with us in the UK because we share interests and values, and because we think they're a higher standard than you'll find in other countries, groups or individuals. Presumably, that's why we cast our net around the world to judge and act against others.

Well, if we are so good – and our morals and laws are so sound – shouldn't people who make mistakes here be held to account not *despite* holding positions of privilege and responsibility, but *because* they do? We should all, particularly the powerful, have the grace and fortitude to be judged by the values for which we stand. Regardless of who we know or who we work for.

Biker Harry Dunn died after a collision

GET IN TOUCH
matt.prior@haymarket.com
@matty_prior

ESTABLISHED 1895

The Autocar

BMW's lightweight coupé

23 November 1972

HERE'S AN ANTIDOTE to the new 2 Series Gran Coupé: the 3.0 CSL. Introduced to the UK on 8 October 1972, this was the homologation flagship of BMW's E39 range of two-door grand tourers.

"The bonnet, bootlid and doors are of aluminium, and the body pressings are in a lighter-gauge steel," we wrote. "Wider, light alloy wheels are fitted, with 195/70 tyres on 14in rims, with 'eyebrows' above the arches to increase body width. Suspension spring rates have been slightly increased. A 25% limited-slip differential and manual gearbox are standard, and the engine capacity has been raised from 2985cc to 3002cc. Power remains unchanged at 200bhp."

The 3.0 CSL went on to become a highly desirable icon; just 500 UK examples were made, and very few of those with the full aero package that earned it the 'Batmobile' tag.

GET MORE AUTOCAR

Renaultsport Nürburgring hot hatch specials driven

YouTube
youtube.com/autocar
facebook.com/autocarofficial
twitter.com/autocar
autocar_official

SUBSCRIBE

autocar.co.uk/subscribe
For all our latest print and digital subscription offers

SHUTTERSTOCK

DMS AUTOMOTIVE
UNLEASHING PERFORMANCE

THE ULTIMATE IN PERFORMANCE UPGRADES

AT DMS AUTOMOTIVE WE'VE BEEN UNLEASHING AUTOMOTIVE PERFORMANCE FOR OVER 21 YEARS

DMS MCLAREN 720S (**EVO** SEPTEMBER 2018)
"THIS IS A CAR THAT NOT ONLY DESERVES YOUR FULL ATTENTION, BUT REQUIRES IT"

DMS 911 TURBO (ULTIMATE SUPERCAR SPRING 2019**)**
"BALLISTIC PERFORMANCE IN AN EMINENTLY USEABLE PACKAGE"

DMS F10 M5 (**EVO** DEC '15)
"730BHP, 200MPH+ TYRE-SHREDDING MONSTER"

DMS MCLAREN 650S (**EVO** OCT '15)
"REAL MUSCULARITY AND THE STRENGTH OF THE MID-RANGE IS STAGGERING"

DMS M2 (**EVO** SEPT '15)
"MORE POWER DOES MEAN MORE FUN"

BELOW IS A SMALL SELECTION OF OUR MORE POPULAR UPGRADES:

AUDI
AUDI RS6 4.0 T V8 » 700+BHP (+DE-LIMIT)
AUDI RS6 V10 » 680+BHP (+DE-LIMIT)
AUDI 2017 R8 V10 » 650BHP (+DE-LIMIT)
AUDI R8 V10 » 592+BHP (+DE-LIMIT)
AUDI RS4 / RS5 » 480+ BHP (+DE-LIMIT)
AUDI RS3 / TTRS (8V MK2) » 480+ BHP
AUDI S3 / GOLF R » 378+ BHP (+DE-LIMIT)
AUDI 3.0TDI (ALL MODELS) » 315+ BHP
AUDI 3.0 BI-TDI (ALL MODELS) » 400+ BHP
AUDI Q7 / A8 4.2 TDI » 400+ BHP

BMW
F90 M5 » 750+BHP (+DELIMIT)
M2 COMPETITION » 530BHP (+DE-LIMIT)
M2 » 435BHP (+DE-LIMIT)
M3/M4 » 540+BHP (+DE-LIMIT)
M5/M6 » 730+BHP (+DE-LIMIT)
X5M/X6M » 730+BHP (+DE-LIMIT)
X5M50D/X6M50D » 450+BHP
M140I / 240I / 340I / 440I » 430+BHP
M135I/M235I » 410+BHP
i8 » 415BHP
120I / 220I / 320I / 420I » 275+BHP
118D / 218D / 318D » 225BHP
120D / 220D / 320D / 420D » 40BHP
330I / 430I » 320+BHP
335I / 435I » 410+BHP
330E » 320+BHP
330D / 430D / 530D / 730D » 360BHP
335D / 435D / 535D » 395+BHP
550I / 650I » 555+BHP (+DE-LIMIT)
640D / 740D » 395BHP (+DE-LIMIT)
X530D / X630D » 360BHP

MERCEDES-BENZ
A35 AMG » 350+BHP (+DE-LIMIT)
E63S W213 » 700+BHP (+DE-LIMIT)
A45 / CLA45 AMG » 430+BHP
AMG GT / GTS » 560BHP (+DE-LIMIT)
C43 / E43 / GLC43 AMG » 455BHP
C63 / 63S 4.0T AMG » 620+BHP
C63 6.3 AMG » 530+BHP
500 4.7 BITURBO (ALL MODELS) » 498+BHP
63 AMG BITURBO (ALL MODELS) » 700+BHP
55 AMG KOMPRESSOR » 600+BHP
(+DE-LIMIT & SUSPENSION LOWERING)
S65 » 780BHP (+DE-LIMIT)
SL65 AMG » 690BHP (+DE-LIMIT)
SL65 BLACK » 720BHP (+DE-LIMIT)
200 CDI (ALL MODELS) » 173BHP
220 CDI (ALL MODELS) » 230BHP
250 CDI (ALL MODELS) » 260BHP
C300 HYBRID » 285BHP
C300E » 350BHP
C400/E400 » 400BHP
350 CDI (ALL MODELS) » 315BHP
420/450 CDI (ALL MODELS) » 358BHP

ALL 2019 RANGE ROVERS AVAILABLE
RR 50SC / SVO / SVR STAGE 1 » 600+BHP
RR 50SC / SVO / SVR STAGE 2 » 650+BHP
2.2 DIESEL (ALL MODELS) » 220+BHP
2.0 DIESEL (ALL MODELS) » 225/265BHP
VELAR 30SI6 » 420BHP
RR 4.4 TDV8 » 395 BHP
RR TDV6 / SDV6 3.0D » 305/350 BHP
DEFENDER 2.2 » 180BHP

PORSCHE
991.2 GT2 RS » 780+BHP
TURBO / S (ALL MODELS) » 750+BHP
991.2 CARRERA (ALL MODELS) » 500+BHP
991.2 CARRERA S (ALL MODELS) » 500+BHP
991.2 CARRERA GTS (ALL MODELS) » 540+BHP
991 GT3 3.8 (ALL MODELS) » 490+BHP
991 GT3 RS 4.0 (ALL MODELS) » 525+BHP
997.2 GT3 RS » 480 BHP
997 GT2 RS » 670+ BHP
997 TURBO / S 3.8 INC PDK » 611 BHP
997 TURBO 3.6 » 625+ BHP
997 CARRERA S PDK » 400+ BHP
997 CARRERA GTS » 435 BHP
996 TURBO / GT2 » 600+ BHP
BOXSTER / CAYMAN 718 GTS » 420+BHP
BOXSTER / CAYMAN 718 S » 420+BHP
BOXSTER / CAYMAN 718 » 380+BHP
BOXSTER / CAYMAN 981 GT4 » 430+BHP
BOXSTER / CAYMAN 981 GTS » 375+BHP
BOXSTER / CAYMAN 981 S » 345+BHP
CAYENNE TURBO 4.8 (ALL) » 650+ BHP
CAYENNE 4.2 DIESEL » 450+ BHP
CAYENNE / MACAN 3.0 DIESEL » 318+ BHP
MACAN S » 420+BHP
MACAN GTS » 440+BHP
MACAN TURBO (ALL MODELS) » 480+BHP
PANAMERA TURBO » 600+ BHP
PANAMERA DIESEL » 305+ BHP

EXOTIC / MISC
WRAITH / DAWN » 720+BHP
FERRARI 488 PISTA » 780+BHP
FERRARI 488 » 750+BHP
FERRARI PORTOFINO » 680+BHP
FERRARI LUSSO T » 710+BHP
FERRARI CALI T » 680BHP
FERRARI F12 » 780+BHP
FERRARI 430 » 525 BHP
MCLAREN MP4 /650S » 720 BHP
MCLAREN 570/S » 680+BHP
MCLAREN 600LT » 680+BHP
MCLAREN 675LT » 750BHP
MCLAREN 720S » 840+BHP
MCLAREN SENNA » 875+BHP
GALLARDO LP560 » 608+BHP
HURACAN LP610 » 650BHP
AVENTADOR » 750+BHP
BENTLEY 4.0 T V8 » 700+BHP
BENTLEY GT / F-SPUR » 700BHP
GT SPEED / SUPERSPORT » 720+BHP
BENTAYGA W12 » 720+BHP
MASERATI 3.0S PETROL » 470 BHP
MASERATI 3.0 DIESEL » 312 BHP

FURTHER OPTIONS
As well as installing the above engine tunes, we are able to further individualise your car with additional features. Some of which are shown here. Contact us for further details.

Exhaust tuning (Pop's & crackles) | Customized driving modes | Gearbox tuning | Sport dials calibration | Exhaust butterfly control

/DMSAUTOMOTIVE
Follow us on Instagram for daily updates and inspiration

MORE BHP EQUALS LESS RPM EQUALS MORE MPG

DESIGNED IN THE UK
DEVELOPED AT OUR NÜRBURGRING TESTING FACILITIES

UK & WORLDWIDE INSTALLATION CENTRES

SALES@DMSAUTOMOTIVE
UK: **0800 030 5555**
INT: **+44 800 030 5555**
WWW.DMSAUTOMOTIVE.COM

FIESTA ST-LINE EDITION

£199 PER MONTH ON 3 YEAR FORD OPTIONS THE FORD FIESTA ST-LINE EDITION

INCLUDES A £1,000 DEPOSIT CONTRIBUTION WHEN YOU FINANCE WITH FORD CREDIT OPTIONAL FINAL PAYMENT £7,015, CUSTOMER DEPOSIT £4,516

0% APR REPRESENTATIVE

FIND OUT MORE AT FORD.CO.UK

Available on selected Dealer stock only. Please contact a participating Ford Dealer for more information.
Model shown is a Fiesta ST-Line Edition EcoBoost 95PS Petrol 3 Door. Fuel economy mpg (l/100km) (Combined): 54.3 (5.2). *CO_2 emissions: 94g/km.

Figures shown are for comparability purposes; only compare fuel consumption and CO_2 figures with other cars tested to the same technical procedures. These figures may not reflect real life driving results, which will depend upon a number of factors including the accessories fitted, variations in weather, driving styles and vehicle load. *There is a new test used for fuel consumption and CO_2 figures. The CO_2 figures shown however, are based on the outgoing test cycle and will be used to calculate vehicle tax on first registration. Retail Only. Finance subject to status. Freepost Ford Credit. Optional Final Payment is based on 9,000 miles per annum. Further charges may apply subject to mileage and condition, if the vehicle is returned at the end of the agreement. Subject to availability at a Ford UK Authorised Dealer for new vehicles contracted between 1st January 2020 and 31st March 2020 and registered by 30th June 2020